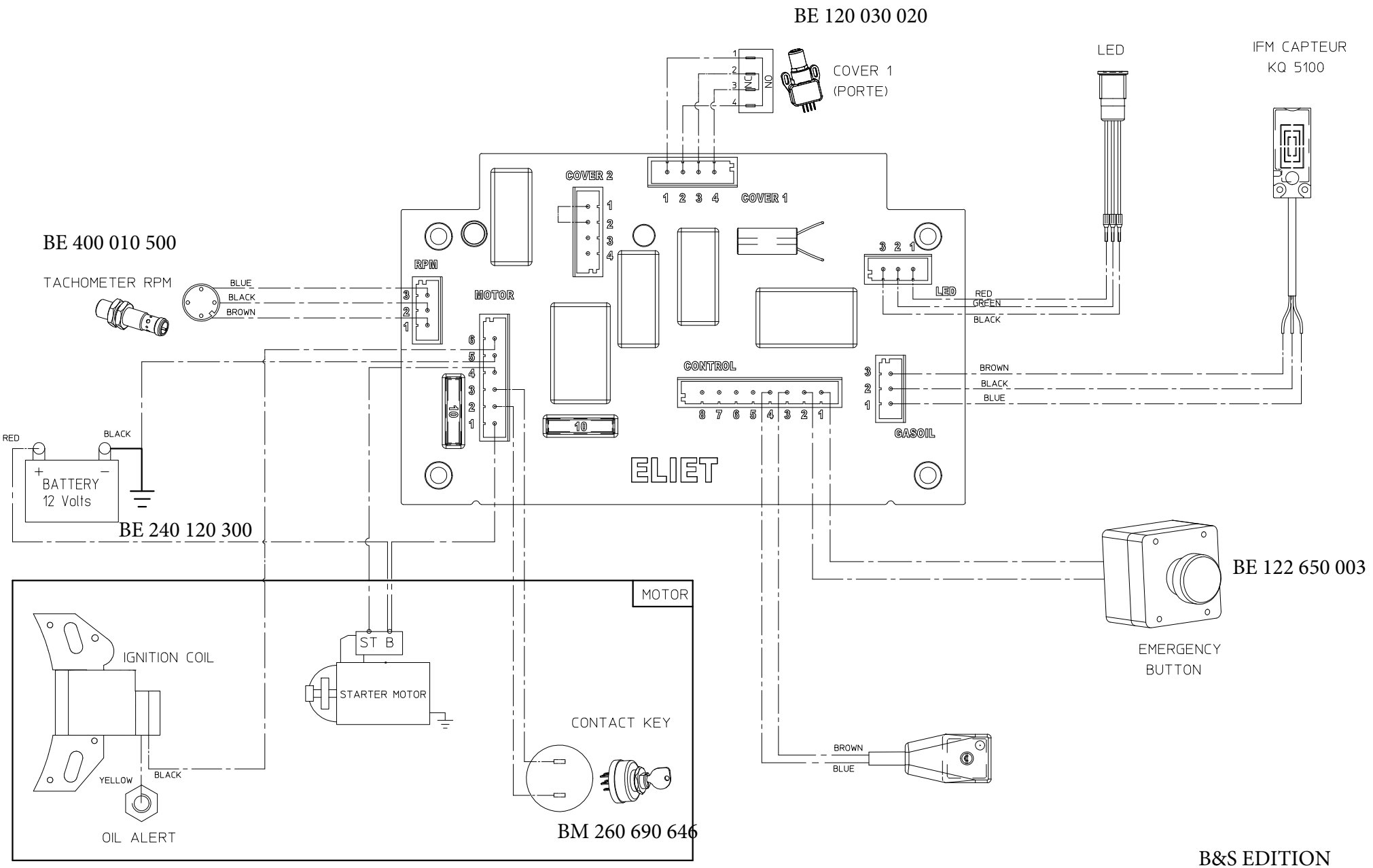

PROF 6 – ELECTRICAL DIAGRAM					
NO	BE 900 054 010	REV	1	DATE	2020/06/02

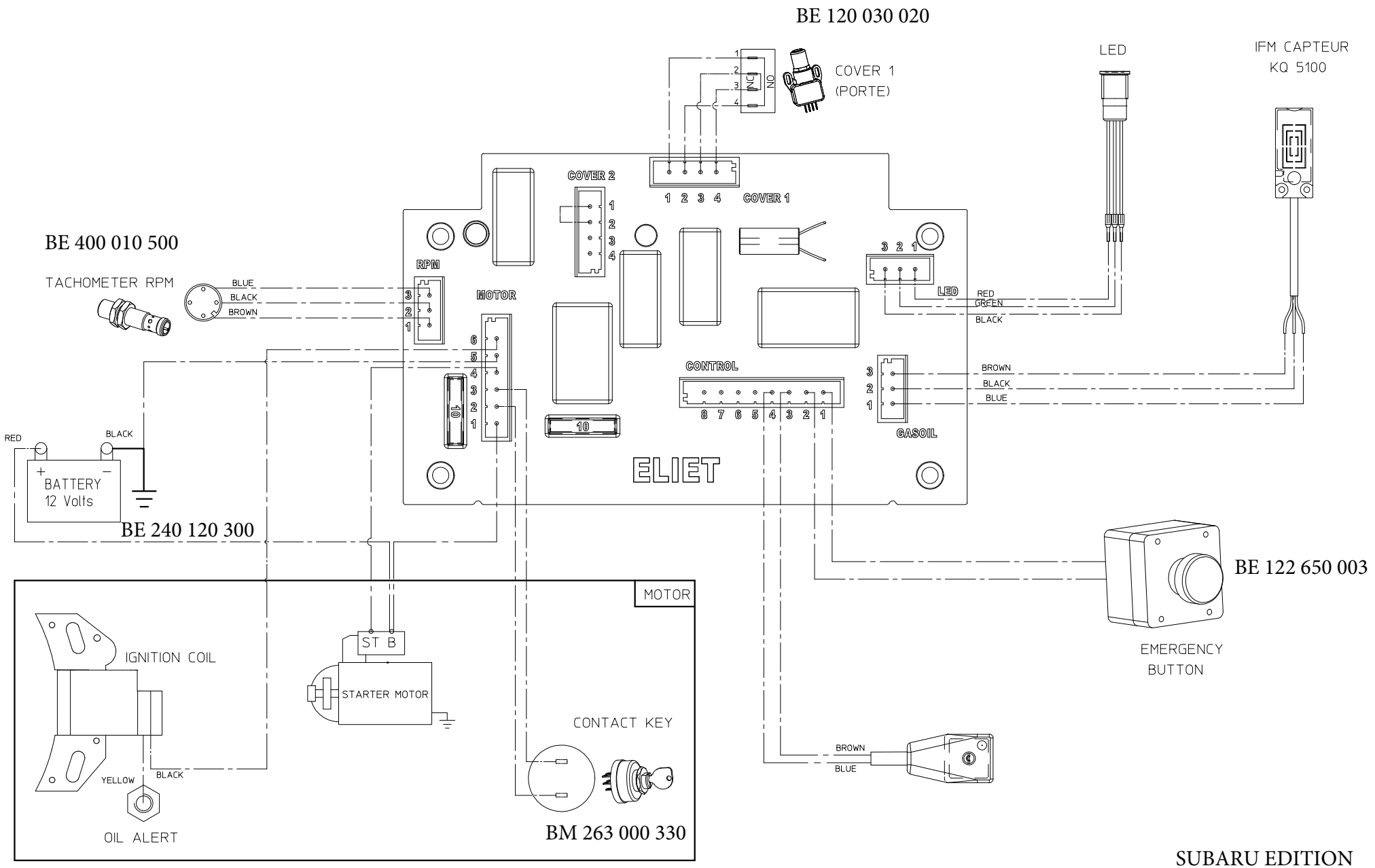

SUBARU EDITION

PROF 6 – ELECTRICAL DIAGRAM					
NO	BE 900 054 010	REV	1	DATE	2020/06/02

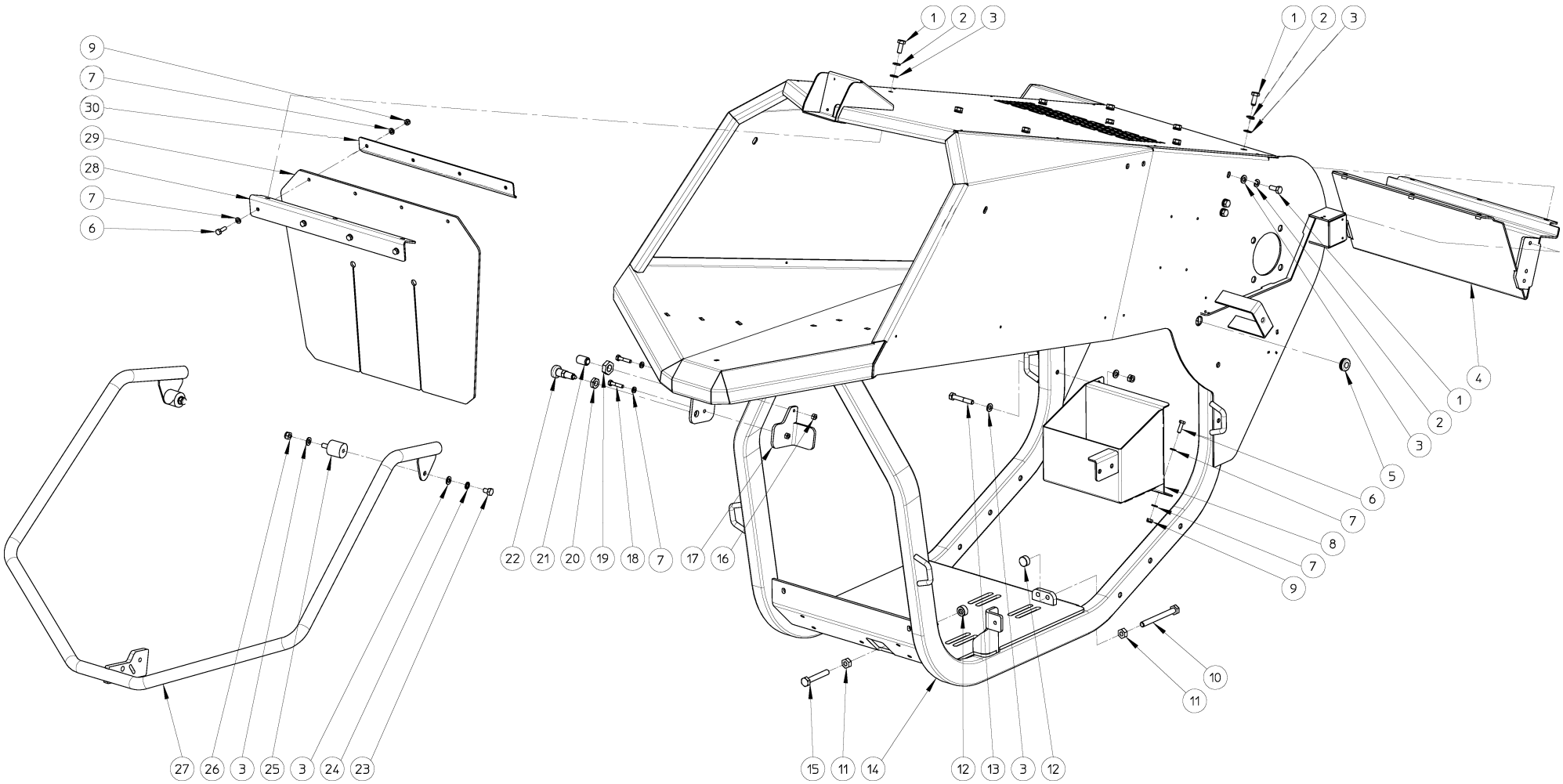

CHASSIS – PROF 6 ZR CC					
NO	MMA 01 054 110	REV	1	DATE	2020/09/02

ELIET MANUAL

PROF 6

MMA 01 054 110 **CHASSIS - PROF 6 ZR CC**

NUMBER	ARTICLE	DESCRIPTION	QUANTITY
1	BS 512 000 820	BOLT M8X20 DIN 933	12
2	BS 533 000 800	LOCK WASHER M8 DIN 127B	12
3	BS 531 000 800	WASHER M8 DIN 125	18
4	MPA 01 054 120	ANTI-RETURN	1
5	BR 000 212 040	GROMMETS 120/200/40	1
6	BS 512 000 620	BOLT M6X20 DIN 933	6
7	BS 531 000 600	WASHER M6 DIN 125	14
8	MPA 01 054 360	SUPPORT BATTERY	1
9	BS 502 000 600	SELF LOCKING NUT M6 DIN 985	6
10	BS 512 001 050	BOLT M10X100 DIN 933	1
11	BS 501 001 000	NUT M10 DIN 934	2
12	MPA 01 074 440	SPACER RING TENSION ENGINE	2
13	BS 511 000 842	BOLT M8X50 DIN 931	1
14	MPA 01 054 050	CHASSIS PROF 6 ZR CC	1
15	BS 512 001 045	BOLT M10X65 DIN 933	1
16	BS 501 000 600	NUT M6 DIN 934	2
17	MPA 01 054 210	COUNTRE PLATE SAFETY BAR	1
18	BS 511 000 630	BOLT M6X30 DIN 931	2
19	BS 501 901 600	SELF LOCKING NUT M16	1
20	BS 501 901 202	NUT M12X1 DIN 439B	1
21	BS 351 601 624	SPRING LOADED PLUNJER M16X24	1
22	BN 000 212 550	LOCKING BOLTS WITH LOCKING GROOVE	1
23	BS 512 000 812	BOLT M8X12 DIN 933	2
24	BS 534 000 800	LOCK WASHER M8 DIN 6798A	2
25	BR 600 130 301	ANTIVIBRATION BLOCKS 30X30B M8X16	2
26	BS 502 000 800	SELF LOCKING NUT M8 DIN 985	3
27	MPA 01 054 200	SAFETY BAR	1
28	MPA 01 054 230	FRONT FIXATION RUBBER PROTECTION	1
29	BR 902 000 010	RUBBER PROTECTION	1
30	MPA 01 054 220	BACK FIXATION RUBBER PROTECTION	1

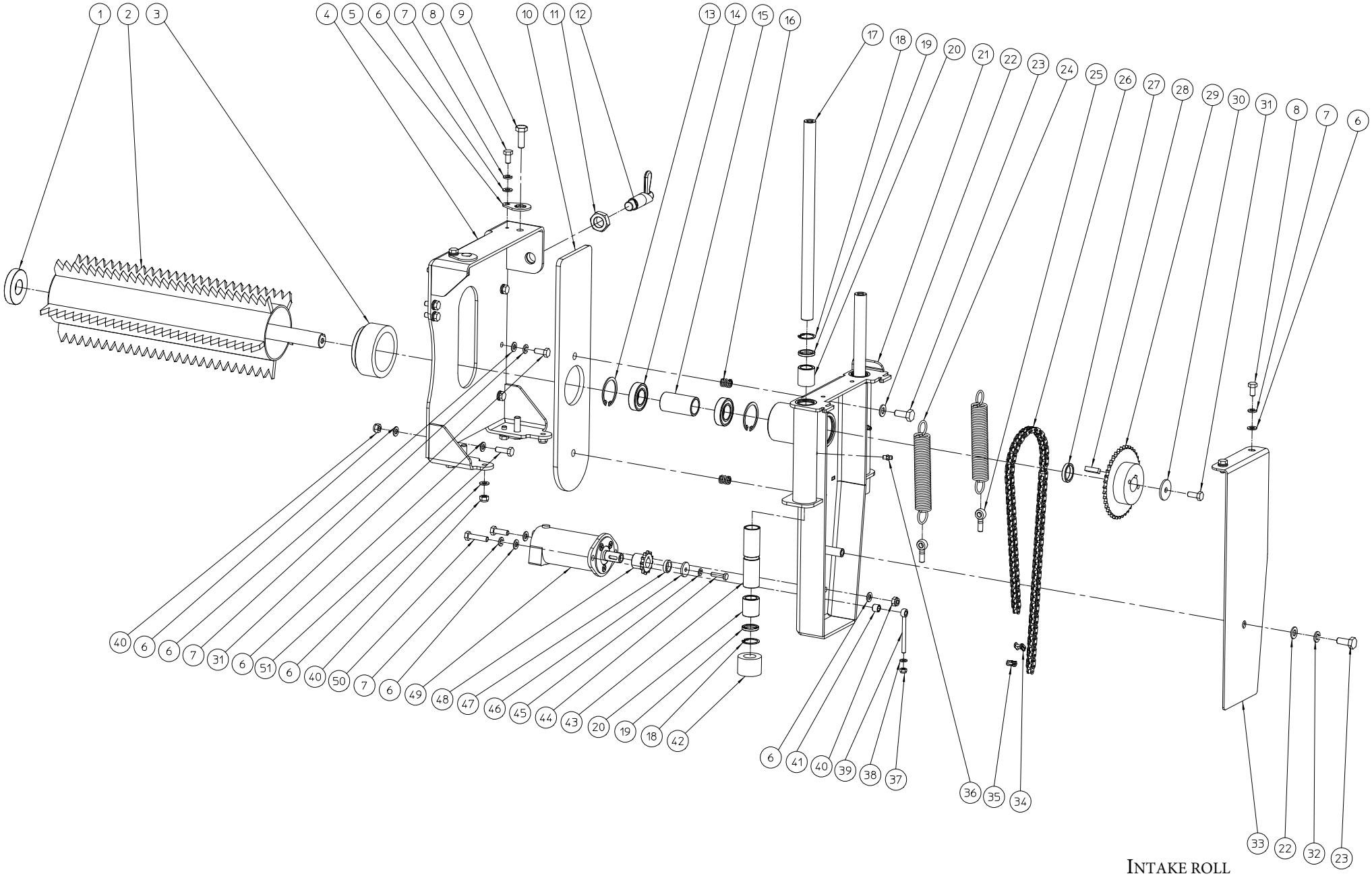

INTAKE ROLL

AMENEUR – PROF 6 ZR CC OR					
NO	MMA 01 054 120	REV	1	DATE	2020/09/02

ELIET MANUAL

PROF 6

MMA 01 054 120 **INTAKE ROLL - PROF 6 ZR CC OR**

NUMBER	ARTICLE	DESCRIPTION	QUANTITY
1	BR 910 000 970	NYLON GUIDE INTAKE ROLL	1
2	MPA 01 054 060	INTAKE ROLL	1
3	BR 910 000 980	NYLON PROTECTION INTAKE ROLL	1
4	MPA 01 054 070	SUPPORT INTAKE ROLL	1
5	MPA 01 054 750	FIXATING PLATE - BOLT INTAKE ROLL	4
6	BS 531 000 800	WASHER M8 DIN 125	20
7	BS 533 000 800	LOCK WASHER M8 DIN 127B	14
8	BS 512 000 816	BOLT M8X16 DIN 933	6
9	BS 512 001 030	BOLT M10X30 DIN 933	4
10	BR 910 001 030	NYLON COVER PLATE	1
11	BS 501 902 000	SELF LOCKING NUT K20	1
12	BO 150 003 150	PULL LOCK WITH HANDLE 15MM	1
13	BB 002 000 470	RETAINING RING 32 DIN 472	2
14	BL 002 504 703	BEARING 6005 ZZ	2
15	MPA 01 470 430	SPACER	1
16	BV 911 000 010	SPRING 14X2X16	2
17	MPA 01 054 090	AXLE	2
18	BB 002 000 280	RETAINING RING 28 DIN 472	4
19	BR 302 120 284	SEAL 20X28X4	4
20	BL 866 010 010	BRONZE BUSH BEARING FMTC20	4
21	MPA 01 054 110	SUPPORT HYDR. ENGINE INTAKE ROLL	1
22	BS 531 001 000	WASHER M10 DIN 125	3
23	BS 512 001 025	BOLT M10X25 DIN 933	3
24	BV 919 000 010	SPRING	2
25	BS 551 000 830	EYE BOLT M8X30 DIN 444	2
26	BA 101 085 020	CHAINE	1
27	MPA 01 470 420	SPACER RING	1
28	BB 341 080 725	KEY 8X7X25 DIN 6880	1
29	BA 161 040 251	SPROCKET SIMPLEX 3/8"X7/32" 40T	1
30	BS 532 008 356	WASHER M8X35X3	1
31	BS 512 000 820	BOLT M8X20 DIN 933	8
32	BS 533 001 000	LOCK WASHER M10 DIN 127B	1
33	MPA 01 054 080	COVER PLATE INTAKE ROLL	1
34	BA 151 200 000	CONNECTING CHAIN LINK SIMPLEX 3/8"X7/32	1
35	BA 151 400 000	CONNECTING CHAIN LINK SIMPLEX (1/2) 3/8"	1
36	BY 100 106 100	GREASE FITTING M6 DIN 71412	2
37	BS 502 000 600	SELF LOCKING NUT M6 DIN 985	1
38	BS 531 000 600	WASHER M6 DIN 125	1
39	BS 551 100 646	EYE BOLT M6X70 DIN 444	1
40	BS 502 000 800	SELF LOCKING NUT M8 DIN 985	4

41	MPA 01 054 810	SPACER	1
42	BR 900 001 810	RUBBER SPACER	2
43	MPA 01 054 100	SPACER BAR	2
44	BS 512 000 625	BOLT M6X25 DIN 933	1
45	BS 533 000 600	LOCK WASHER M6 DIN 127B	1
46	BS 532 006 276	WASHER M6X27X3	1
47	MPA 01 054 910	SPACER HYDR. ENGINE	1
48	BA 161 012 162	SPROCKET SIMPLEX 3/8"X7/32" 12T	1
49	BH 331 205 000	HYDRAULIC ENGINE EPMM 50CC	1
50	BS 512 000 835	BOLT M8X35 DIN 933	1
51	BS 512 000 825	BOLT M8X25 DIN 933	2

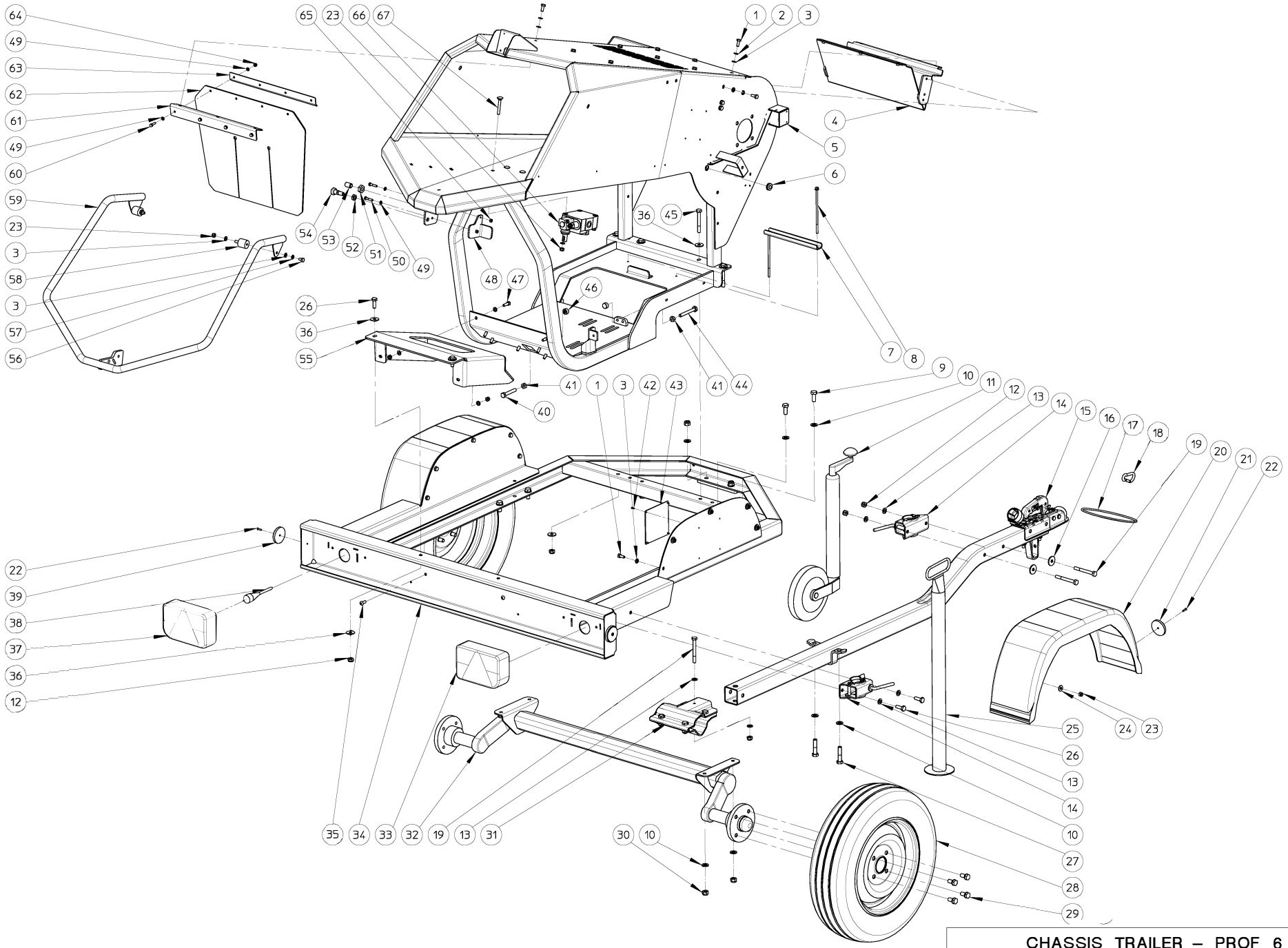

CHASSIS TRAILER – PROF 6 OR					
NO	MMA 01 054 130	REV	1	DATE	2020/09/02

ELIET MANUAL

PROF 6

MMA 01 054 130 **CHASSIS TRAILER - PROF 6 OR**

NUMBER	ARTICLE	DESCRIPTION	QUANTITY
1	BS 512 000 820	BOLT M8X20 DIN 933	22
2	BS 533 000 800	LOCK WASHER M8 DIN 127B	12
3	BS 531 000 800	WASHER M8 DIN 125	45
4	MPA 01 054 120	ANTI-RETURN	1
5	MPA 01 054 140	CHASSIS TRAILER	1
6	BR 000 212 040	GROMMETS 120/200/40	1
7	MPA 01 054 160	FIXATING PLATE BATTERY	1
8	BS 511 400 657	HEXAGON FLANGE BOLTS M6X170 DIN 6921	2
9	BS 512 001 230	BOLT M12X30 DIN 933	4
10	BS 531 001 200	WASHER M12 DIN 125	12
11	BY 727 000 100	SUPPORT WHEEL	1
12	BS 502 001 000	SELF LOCKING NUT M10 DIN 985	11
13	BS 531 001 000	WASHER M10 DIN 125	8
14	BY 728 010 100	CLAMP SUPPORT WHEEL	2
15	BY 709 601 004	TRAILER HANDLEBAR 1850MM	1
16	BS 532 010 356	WASHER M10X35X3	2
17	BY 709 601 200	SECURITY CABLE TRAILER	1
18	BY 522 080 080	HOOK 80X8MM	1
19	BS 511 001 049	BOLT M10X90 DIN 931	3
20	BY 722 400 400	MUDGUARD TRAILER	2
21	BY 708 112 010	ROUND REFLECTOR WHITE D60	2
22	BB 221 104 160	POP PLUG ALU 3.9X16 DIN 7337 A	4
23	BS 502 000 800	SELF LOCKING NUT M8 DIN 985	24
24	BS 532 008 223	WASHER M8X22X1.5	10
25	BY 709 600 602	TRAILER SUPPORT	1
26	BS 512 001 030	BOLT M10X30 DIN 933	4
27	BS 511 001 243	BOLT M12X55 DIN 931	2
28	BW 054 055 000	TRAILER TIRE	2
29	BS 512 301 220	BOLT M12X1.5X20 DIN 961	8
30	BS 502 001 200	SELF LOCKING NUT M12 DIN 985	6
31	BY 709 601 100	FIXATION TRAILER HANDLEBAR	1
32	BY 726 020 080	TIRE SUPPORT	1
33	BY 707 120 502	LIGHT - RIGHT SIDE	1
34	MPA 01 074 030	CHASSIS TRAILER	1
35	BS 522 500 820	SCREW M8X20 ISO 7380	2
36	BS 532 010 305	WASHER M10X30X2.5	12
37	BY 707 120 501	LIGHT - LEFT SIDE	1
38	BY 707 120 503	CONNECTING CABLE	1
39	BY 708 122 010	REFLECTOR	2
40	BS 512 001 045	BOLT M10X65 DIN 933	1

41	BS 501 001 000	NUT M10 DIN 934	2
42	BB 221 103 100	POP PLUG ALU 3X10 DIN 7337 A	4
43	MPA 01 052 680	IDENTIFICATION PLATE TRAILER	1
44	BS 512 001 048	BOLT M10X80 DIN 933	1
45	BS 511 001 048	BOLT M10X80 DIN 931	4
46	MPA 01 074 440	SPACER RING TENSION ENGINE	2
47	BS 512 000 825	BOLT M8X25 DIN 933	7
48	MPA 01 054 210	COUNTRE PLATE SAFETY BAR	1
49	BS 531 000 600	WASHER M6 DIN 125	10
50	BS 511 000 630	BOLT M6X30 DIN 931	2
51	BS 501 901 600	SELF LOCKING NUT M16	1
52	BS 501 901 202	NUT M12X1 DIN 439B	1
53	BS 351 601 624	SPRING LOADED PLUNJER M16X24	1
54	BN 000 212 550	LOCKING BOLTS WITH LOCKING GROOVE	1
55	MPA 01 054 150	CONNECTING PLATE CABLE	1
56	BS 512 000 812	BOLT M8X12 DIN 933	2
57	BS 534 000 800	LOCK WASHER M8 DIN 6798A	2
58	BR 600 130 301	ANTIVIBRATION BLOCKS 30X30B M8X16	2
59	MPA 01 054 200	SAFETY BAR	1
60	BS 512 000 620	BOLT M6X20 DIN 933	4
61	MPA 01 054 230	FRONT FIXATION RUBBER PROTECTION	1
62	BR 902 000 010	RUBBER PROTECTION	1
63	MPA 01 054 220	BACK FIXATION RUBBER PROTECTION	1
64	BS 502 000 600	SELF LOCKING NUT M6 DIN 985	4
65	BS 501 000 600	NUT M6 DIN 934	2
66	BH 400 401 101	DISTRIBUTION BLOCK	1
67	BS 554 100 844	BOLT M8X60 DIN603	3

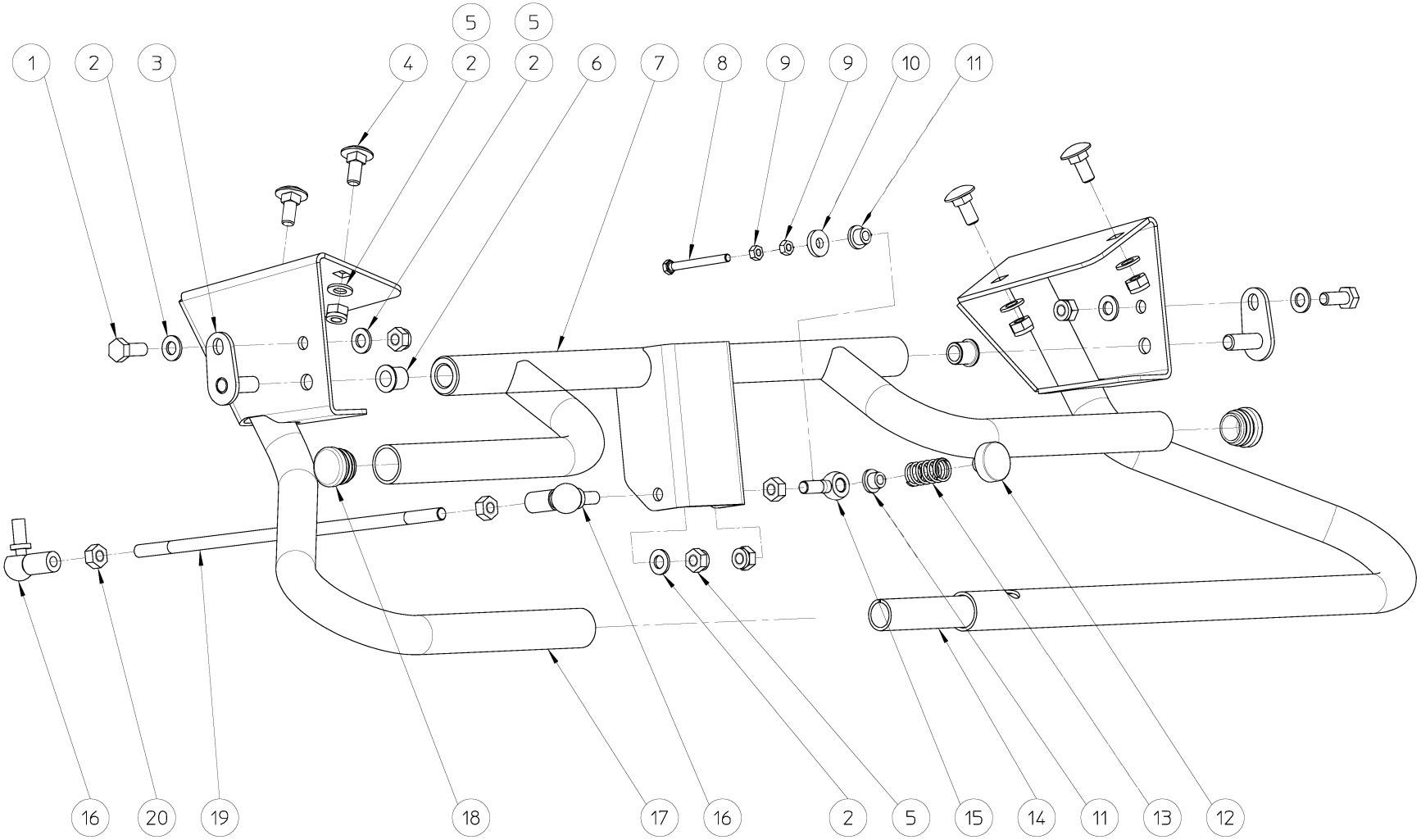

COMMAND INTAKE ROLL – PROF 6 ZR CC					
NO	MMA 01 054 140	REV	1	DATE	2020/09/02

ELIET MANUAL

PROF 6

MMA 01 054 140 **COMMAND INTAKE ROLL - PROF 6 ZR CC**

NUMBER	ARTICLE	DESCRIPTION	QUANTITY
1	BS 512 000 820	BOLT M8X20 DIN 933	2
2	BS 531 000 800	WASHER M8 DIN 125	9
3	MPA 01 440 600	FIXATION PART	2
4	BS 554 100 820	BOLT M8X20 DIN 603	4
5	BS 502 000 800	SELF LOCKING NUT M8 DIN 985	8
6	BR 112 101 490	NYLON BUSHING WITH COLLAR (10/14/17.5x1	2
7	MPA 01 054 170	COMMAND INTAKE ROLL	1
8	BS 512 000 542	BOLT M5	1
9	BS 501 000 500	NUT M5 DIN 934	2
10	BS 531 200 600	WASHER M6 DIN 7349	1
11	BR 112 060 800	NYLON BUSHING WITH COLLAR (6/10/15x8.5/2	2
12	BE 120 040 070	MAGNET MAESTRO	1
13	BV 911 000 050	COMPRESSION SPRING 1.5 X 15 X 28	1
14	MPA 01 054 180	TRACTION SUPPORT BAR	1
15	BS 551 000 830	EYE BOLT M8X30 DIN 444	1
16	BA 230 010 800	BALL JOINT M8	2
17	MPA 01 054 190	TRACTION SUPPORT BAR	1
18	BR 020 501 250	TUBE CAP Ø 25MM	2
19	MPA 01 054 870	COMMAND DISTRIBUTION BLOCK	1
20	BS 501 000 800	NUT M8 DIN 934	3

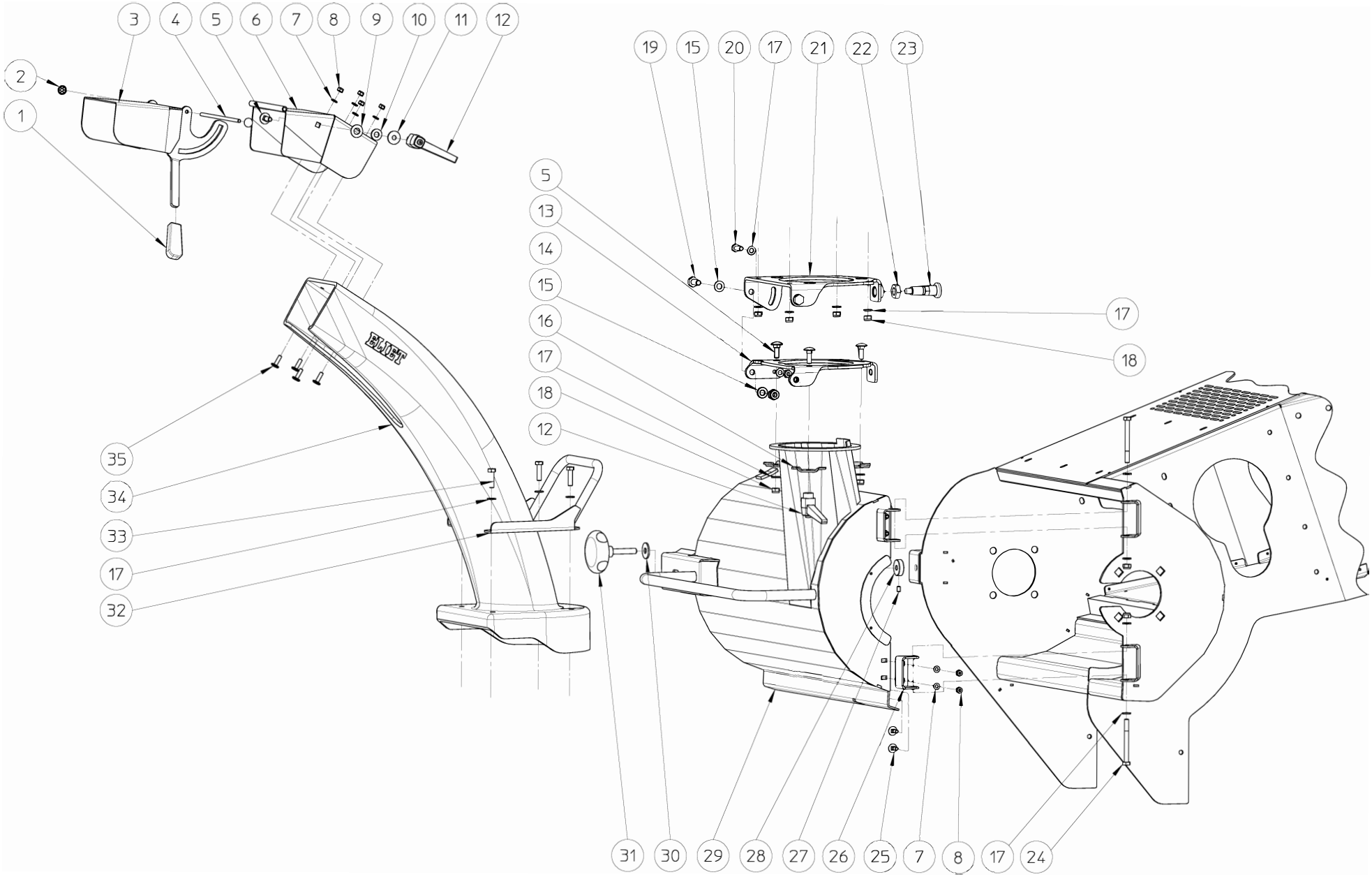

BACK COVER –PROF 6 ZR CC OR					
NO	MMA 01 054 160	REV	1	DATE	2020/07/14

ELIET MANUAL

PROF 6

MMA 01 054 160 **BACK COVER - PROF 6 ZR CC**

NUMBER	ARTICLE	DESCRIPTION	QUANTITY
1	BN 230 100 202	PLASTIC HANDGRIPP 15x5x6 PVC	1
2	BB 011 000 060	STARLOCK 6MM	2
3	MPA 01 054 260	DISCHARGE DIRECTOR	1
4	MPA 01 052 670	TUBE FOR DISCHARGE DIRECTOR	1
5	BS 554 100 825	BOLT M8X25 DIN 603	4
6	MPA 01 054 290	SUPPORT DISCHARGE DIRECTOR	1
7	BS 531 000 600	WASHER M6 DIN 125	8
8	BS 502 000 600	SELF LOCKING NUT M6 DIN 985	8
9	BR 111 120 100	NYLON BUSHING (12.2X24X1.3)	1
10	BR 111 100 200	NYLON BUSHING (10.5/21x2.5)	1
11	BS 532 008 253	WASHER M8X25X1.5	1
12	BN 530 108 800	CLAMP LEVERS	2
13	MPA 01 054 280	ROTATION RING DISCHARGE CHUTE	1
14	BS 502 001 000	SELF LOCKING NUT M10 DIN 985	2
15	BS 531 001 000	WASHER M10 DIN 125	4
16	MPA 01 073 520	TUBE CONNECTION	3
17	BS 531 000 800	WASHER M8 DIN 125	16
18	BS 502 000 800	SELF LOCKING NUT M8 DIN 985	9
19	BS 512 001 025	BOLT M10X25 DIN 933	2
20	BS 512 000 825	BOLT M8X25 DIN 933	1
21	MPA 01 054 270	SUPPORT ROTATION RING	1
22	BS 501 901 601	NUT M16	1
23	BN 000 216 580	SELF LOCKING NUT WITH SPRING	1
24	BS 511 000 848	BOLT M8X80 DIN 931	2
25	BS 554 100 620	BOLT M6X20 DIN 603	4
26	MPA 01 054 980	HINGE BACK COVER	2
27	BS 023 000 610	SET SCREW M6X10 DIN 916	1
28	MPA 01 054 890	NUT BACK COVER	1
29	MPA 01 054 250	BACK COVER	1
30	BS 532 010 305	WASHER M10X30X2.5	1
31	BN 630 410 420	LOB KNOW M10	1
32	MPA 01 073 280	HANDLE EJECTION	1
33	BS 512 000 830	BOLT M8X30 DIN 933	4
34	BR 930 070 010	DISCHARGE TUNNEL	1
35	BS 552 100 620	SCREW M12X40 TYPE KF	4

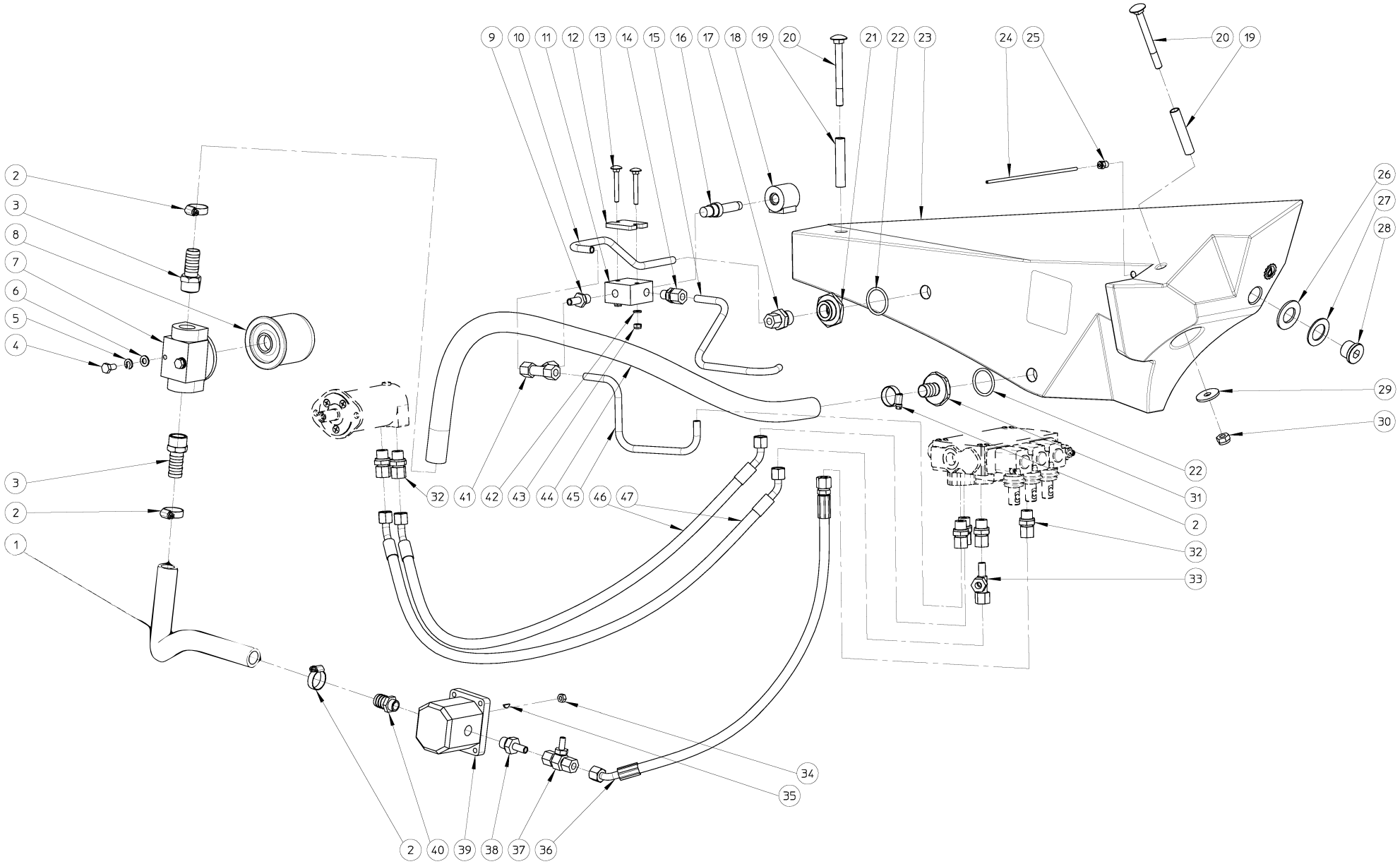

HYDRAULICS – PROF 6 ZR CC OR					
NO	MMA 01 054 170	REV	2	DATE	

ELIET MANUAL

PROF 6

MMA 01 054 170 **HYDRAULICS - PROF 6 ZR**

NUMBER	ARTICLE	DESCRIPTION	QUANTITY
1	BR 212 019 085	FLEXIBLE HYDRAULICS TUBE 19MM	1
2	BT 670 117 290	HOSE CLAMP 17X29MM	4
3	BT 136 261 219	ADAPTOR Ø 19MM - 3/4"	2
4	BS 512 000 816	BOLT M8X16 DIN 933	2
5	BS 533 000 800	LOCK WASHER M8 DIN 127B	2
6	BS 531 000 800	WASHER M8 DIN 125	2
7	BH 280 612 120	SUPPORT HYDRAULIC FILTER 3/4”	1
8	BH 280 212 010	FIXATION HYDRAULIC FILTER	1
9	BH 512 611 004	STANDPIPE ADAPTOR 10Lx1/4"	1
10	MPA 01 054 720	RETURN TUBE	1
11	BH 410 001 610	ELECTROVANNE	1
12	MPA 01 054 540	SUPPORT ELECTROVANNE	1
13	BS 554 100 642	BOLT M6X50 DIN 603	2
14	BH 509 211 004	MALE STUD COUPLING 10Lx1/4"	1
15	MPA 01 054 710	ELECTROVANNE TUBE	1
16	BH 410 001 620	VALVE ELECTROVANNE	1
17	BH 509 211 008	MALE STUD COUPLING 10Lx1/2"	1
18	BH 410 001 630	COIL ELECTROVANNE	1
19	MPA 01 054 530	TUBE SUPPORT TANK	2
20	BS 554 101 050	BOLT M10	2
21	MPA 01 311 360	CONNECTOR	1
22	BH 812 345 350	O-RING 34,52 X 3,53 MM VITON	2
23	BY 717 212 010	HYDR. TANK 10L	1
24	BH 646 020 040	TUYAU D'HUILE	1
25	BH 642 020 040	COUPLING	1
26	RDVD 01 054 017	CAP SEAL	1
27	MPA 01 054 970	WASHER	1
28	BH 518 501 200	COUPLING	1
29	BS 532 010 356	WASHER M10X35X3	2
30	BS 502 001 000	SELF LOCKING NUT M10 DIN 985	2
31	MPA 01 073 890	ADAPTOR Ø 20MM - 1/2"	1
32	BH 509 211 006	MALE STUD COUPLING 10Lx3/8"	6
33	BH 512 111 000	ROTARY L-FITTING FEMALE 10L	1
34	BS 501 000 700	NUT M7 DIN 934	1
35	BH 281 201 011	GEAR WHEEL Z14 25X22 DIN5482 GR 2/1	1
36	BB 321 020 512	KEY 2X5X12.65 DIN 6888	1
37	BH 551 040 630	TUBE	1
38	BH 563 000 100	MANOMETER COUPLER 10LxM16x2	1
39	BH 512 671 006	STANDPIPE ADAPTOR 10SR3/8"	1
40	BH 210 103 200	HYDRAULIC PUMP 3.2CC	1

41	BT 136 260 620	CONNECTION	1
42	BH 510 011 000	EQUAL TEE 10L	1
43	BS 531 000 600	WASHER M6 DIN 125	2
44	BS 502 000 600	SELF LOCKING NUT M6 DIN 985	2
45	BR 212 019 038	NYLON NUT M6	1
46	MPA 01 054 700	RETURN HYDR. OIL	1
47	BH 551 040 870	FLEXIBLE HYDRAULIC HOSE 1/4"x870	1
48	BH 551 040 890	FLEXIBLE HYDRAULIC HOSE 1/4"x895	1

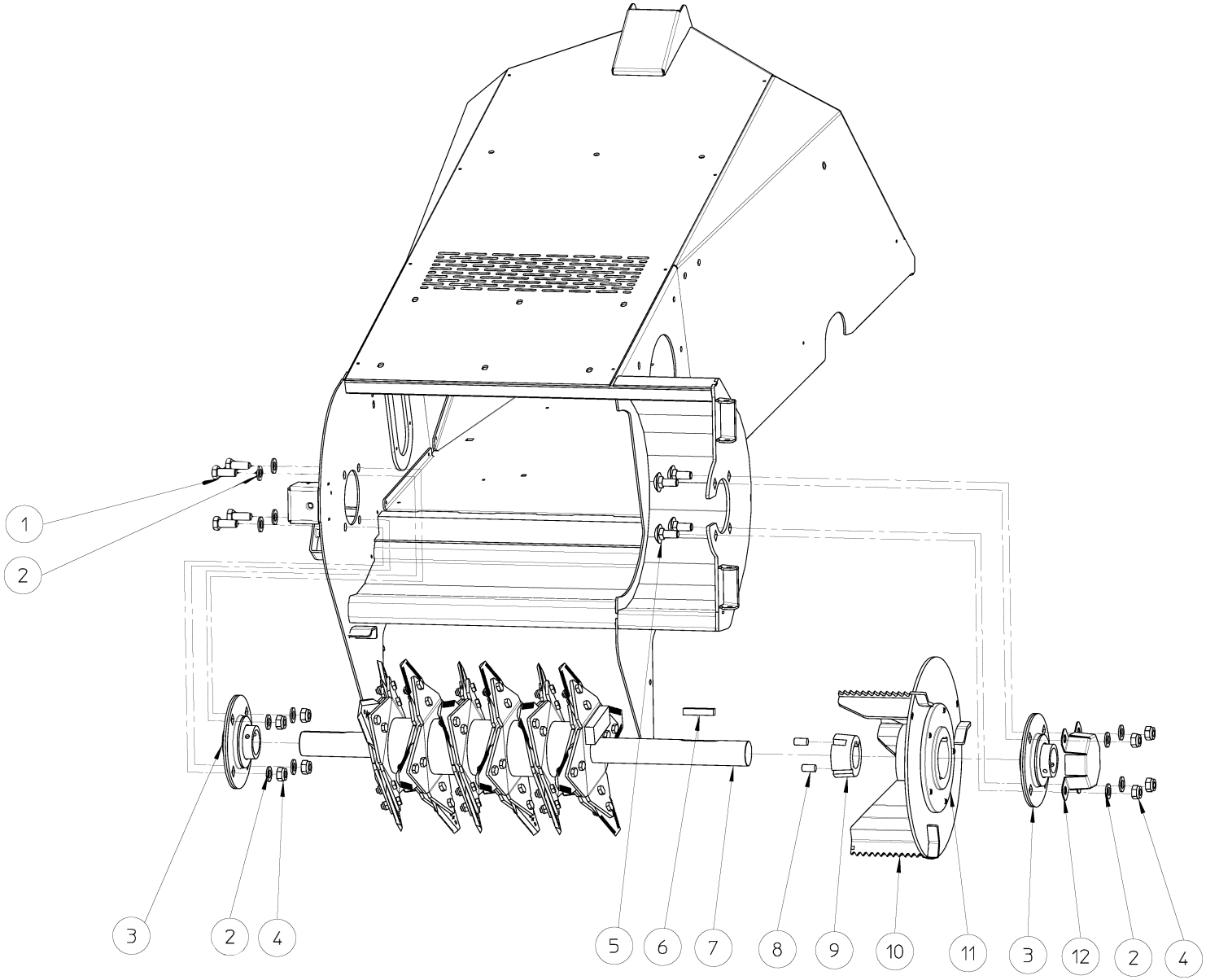

ROTOR + IMPELLER – PROF 6 ZR CC OR					
NO	MMA 01 054 180	REV	1	DATE	2020/09/02

ELIET MANUAL

PROF 6

MMA 01 054 180 **ROTOR + IMPELLER - PROF 6**

NUMBER	ARTICLE	DESCRIPTION	QUANTITY
1	BS 512 001 230	BOLT M12X30 DIN 933	4
2	BS 531 001 200	WASHER M12 DIN 125	12
3	BL 801 604 001	KIT BEARING UCPF 208 COMPLETE	2
4	BS 502 001 200	SELF LOCKING NUT M12 DIN 985	8
5	BS 554 101 230	BOLT M12	4
6	BB 341 121 050	KEY DIN 6880	1
7	MPA 01 054 310	ROTOR	1
8	BB 501 311 220	SET SCREW 7/16"X7/8"	2
9	BB 501 154 000	TAPER LOCK TL 2012-40	1
10	MPA 01 470 190	IMPELLER	1
11	BA 281 753 201	FLANGE Ø175x32 - TL 2012	1
12	MPA 01 054 580	PROTECTION BEARING	1

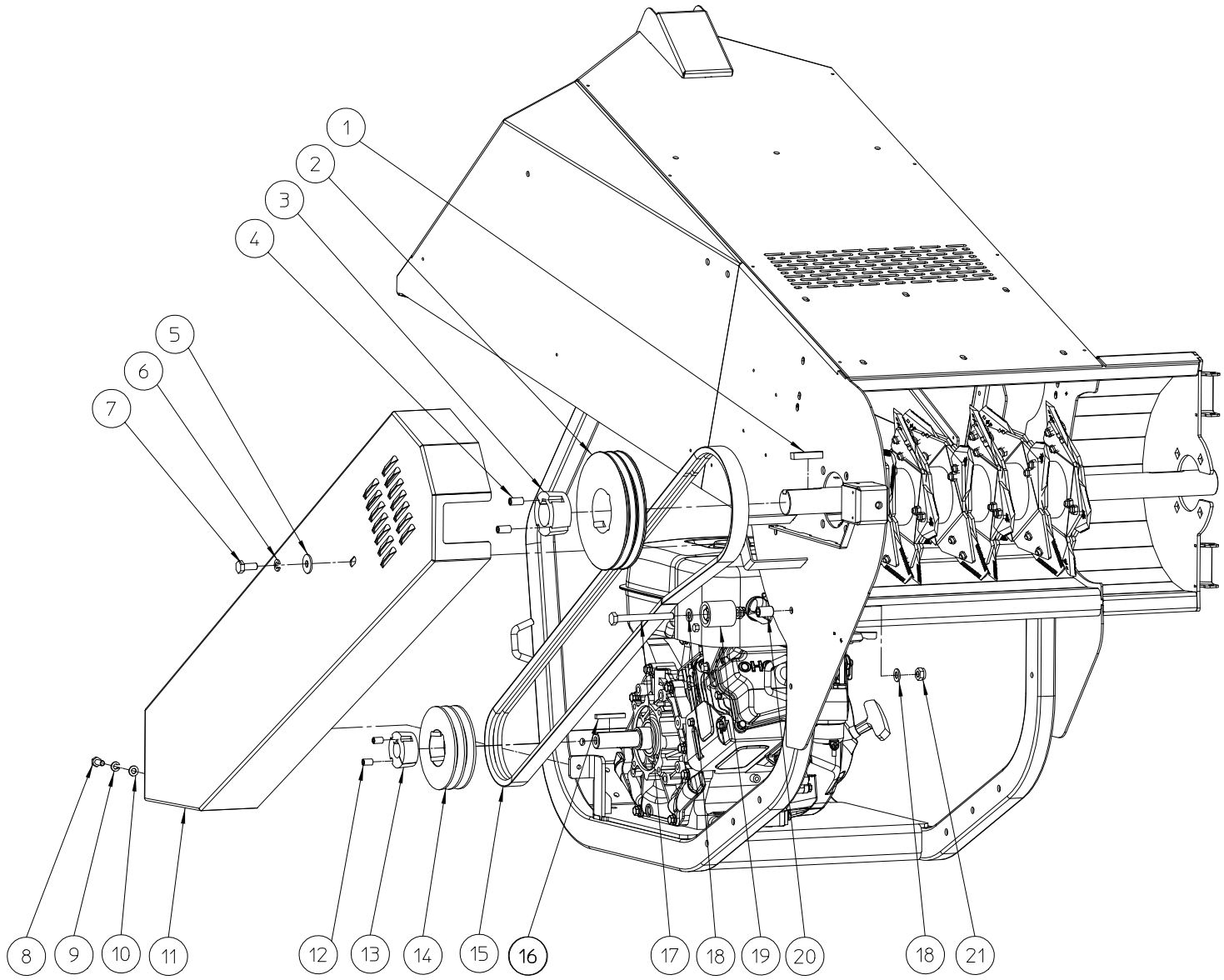

TRANSMISSION – PROF6 ZR CC OR					
NO	MMA 01 054 190	REV	1	DATE	2020/07/09

ELIET MANUAL

PROF 6

MMA 01 054 190 **TRANSMISSION - PROF 6 ZR CC OR**

NUMBER	ARTICLE	DESCRIPTION	QUANTITY
1	BB 341 121 050	KEY DIN 6880	1
2	BA 562 701 801	PULLEY SPA 180	1
3	BB 501 154 000	TAPER LOCK TL 2012-40	1
4	BB 501 311 220	SET SCREW 7/16"X7/8"	2
5	BS 532 010 305	WASHER M10X30X2.5	1
6	BS 533 001 000	LOCK WASHER M10 DIN 127B	1
7	BS 512 001 025	BOLT M10X25 DIN 933	1
8	BS 512 000 820	BOLT M8X20 DIN 933	1
9	BS 533 000 800	LOCK WASHER M8 DIN 127B	1
10	BS 531 000 800	WASHER M8 DIN 125	1
11	MPA 01 054 320	PROTECTIVE BELTCOVER	1
12	BB 501 310 160	SET SCREW 3/8"X5/8"	2
13	BB 501 231 600	TAPER LOCK TL 1610-1"	1
14	BA 562 701 251	PULLEY SPA 125	1
15	BA 552 222 400	BELT XPA 2240	1
16	BB 342 060 650	KEY 6.35X6.35X50 DIN 6880	1
17	BS 512 001 050	BOLT M10X100 DIN 933	1
18	BS 531 001 000	WASHER M10 DIN 125	2
19	BA 599 006 200	BELT GUIDER	1
20	MPA 01 054 820	SPACER	1
21	BS 502 001 000	SELF LOCKING NUT M10 DIN 985	1

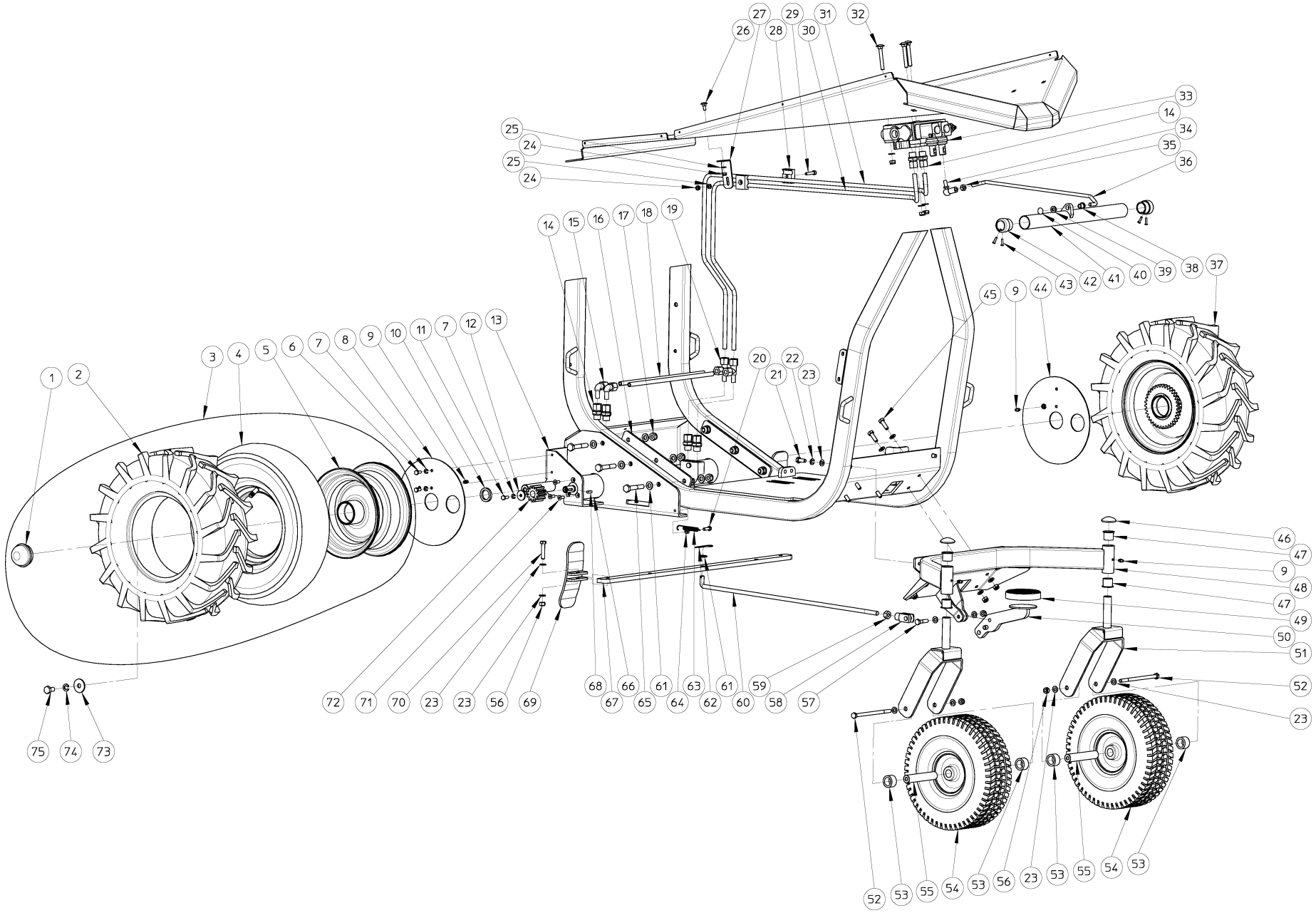

CHASSIS LOWER SIDE – PROF 6 ZR					
NO	MMA 01 054 200	REV	1	DATE	2020/07/09

ELIET MANUAL

PROF 6

MMA 01 054 200 **CHASSIS LOWER SIDE - PROF 6 ZR**

NUMBER	ARTICLE	DESCRIPTION	QUANTITY
1	BY 728 035 520	WHEEL CAP	0
2	BW 910 430 020	RUBBER TIRE	0
3	BW 041 025 021	KIT COMPLETE TIRE	1
4	BW 910 430 030	INSIDE TIRE	0
5	BW 708 025 070	DIABOLO	0
6	BS 512 000 614	BOLT M6X14 DIN 933	4
7	BS 533 000 600	LOCK WASHER M6 DIN 127B	6
8	MPA 01 054 340	PROTECTION TIRE	1
9	BY 100 106 100	GREASE FITTING M6 DIN 71412	4
10	MPA 01 054 570	WASHER	2
11	BS 512 000 616	BOLT M6X16 DIN 933	2
12	BS 532 006 276	WASHER M6X27X3	2
13	MPA 01 054 370	SUPPORT PLATE TIRE	1
14	BH 509 211 006	MALE STUD COUPLING 10Lx3/8"	6
15	BH 511 911 000	ANGULAR ROTARY FITTING 10L	2
16	MPA 01 054 500	REINFORCEMENT PLATE	2
17	BS 502 001 000	SELF LOCKING NUT M10 DIN 985	6
18	MPA 01 054 440	HYDRAULIC TUBES	2
19	BH 512 111 000	ROTARY L-FITTING FEMALE 10L	2
20	BS 512 000 620	BOLT M6X20 DIN 933	2
21	BS 512 000 820	BOLT M8X20 DIN 933	2
22	BS 533 000 800	LOCK WASHER M8 DIN 127B	2
23	BS 531 000 800	WASHER M8 DIN 125	25
24	BS 502 000 600	SELF LOCKING NUT M6 DIN 985	2
25	BS 531 000 600	WASHER M6 DIN 125	2
26	BS 554 100 616	BOLT M6X16 DIN 603	1
27	MPA 01 051 325	SUPPORT FIXATION	1
28	BH 711 020 110	PIPE CLAMP RBPR-110	1
29	BS 521 100 630	SCREW M6X30 DIN 912	1
30	MPA 01 054 430	HYDRAULIC PIPE	1
31	MPA 01 054 420	HYDRAULIC PIPE	1
32	BS 554 100 844	BOLT M8X60 DIN603	3
33	BH 400 401 201	DISTRIBUTION BLOCK	1
34	BA 230 010 800	BALL JOINT M8	1
35	BS 501 000 800	NUT M8 DIN 934	1
36	MPA 01 054 510	CONTROL ROD DISTR. BLOCK	1
37	BW 041 025 020	RIGHT TIRE	1
38	BR 112 081 300	NYLON BUSHING WITH COLLAR (8/11/16x13/2	1
39	BR 111 080 300	NYLON BUSHING (8,2/16X3)	1
40	BB 011 000 080	STARLOCK 8MM	1

41	MPA 01 073 430	COMMAND TUBE	1
42	BR 910 000 010	NYLON BUSHING WITH COLLAR (25/30/34x30/	2
43	BB 221 104 160	POP PLUG ALU 3.9X16 DIN 7337 A	4
44	MPA 01 054 330	PROTECTION TIRE	1
45	BS 512 000 825	BOLT M8X25 DIN 933	5
46	BB 011 000 200	STARLOCK 20MM	2
47	BR 112 202 100	NYLON BUSHING WITH COLLAR (20/24/29x21/	4
48	MPA 01 054 380	SUPPORT FRONT TIRES	1
49	BR 900 000 110	RUBBER SOCKS DIA 90X18MM	1
50	MPA 01 054 350	BRAKE	1
51	MPA 01 054 410	FIXATION PART FRONT TIRES	2
52	BS 511 000 854	BOLT M8X140 DIN 931	2
53	MPA 01 340 380	SPACER WHEELSHAFT	4
54	BW 029 020 001	WHEEL 4.00-4 PROF 5	2
55	MPA 01 051 175	WHEEL SHAFT CASTER WHEEL	2
56	BS 502 000 800	SELF LOCKING NUT M8 DIN 985	13
57	BS 511 000 835	BOLT M8X35 DIN 931	1
58	BS 556 001 000	FORK M10X20 DIN 71752	1
59	BS 501 001 000	NUT M10 DIN 934	1
60	MPA 01 054 390	BRAKE TUBE	1
61	BS 531 001 000	WASHER M10 DIN 125	13
62	BB 040 102 040	HAIRPIN COTTER 2MM DIN 11024	1
63	BV 912 000 030	SPRING	2
64	BS 501 000 600	NUT M6 DIN 934	2
65	BS 511 001 044	BOLT M10X60 DIN 931	6
66	BH 331 203 210	HYDRAULIC ENGINE EPMM 32CC	2
67	MPA 01 054 400	BRAKE TUBE	1
68	BB 351 050 516	KEY 5X5X16 DIN 6885A	2
69	MPA 01 070 410	FOOT BRAKE	2
70	BS 512 000 840	BOLT M8X40 DIN 933	2
71	BS 522 100 616	SCREW M6X16 DIN 7991	6
72	BA 603 001 201	GEAR M3 12T	2
73	BS 532 010 355	WASHER M10X35X2.5	2
74	BS 533 001 000	LOCK WASHER M10 DIN 127B	2
75	BS 512 001 020	BOLT M10X20 DIN 933	2

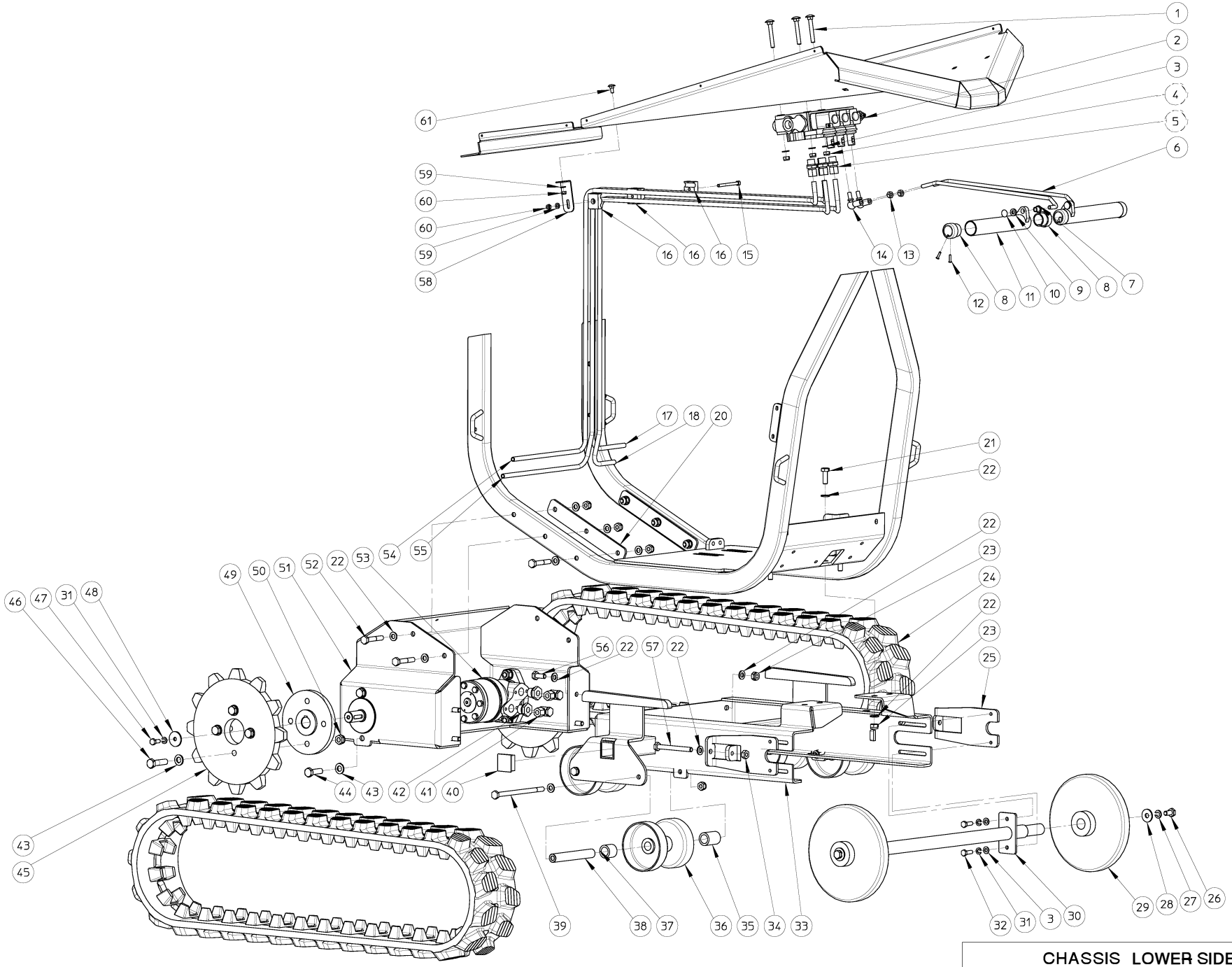

CHASSIS LOWER SIDE PROF 6 CC					
NO	MMA 01 054 210	REV	1	DATE	2020/07/09

ELIET MANUAL

PROF 6

MMA 01 054 210 **CHASSIS LOWER SIDE - PROF 6 CC**

NUMBER	ARTICLE	DESCRIPTION	QUANTITY
1	BS 554 100 844	BOLT M8X60 DIN603	3
2	BH 400 401 301	DISTRIBUTION BLOCK	1
3	BS 531 000 800	WASHER M8 DIN 125	7
4	BS 502 000 800	SELF LOCKING NUT M8 DIN 985	3
5	BH 509 211 006	MALE STUD COUPLING 10Lx3/8"	4
6	MPA 01 054 510	CONTROL ROD DISTR. BLOCK	2
7	BR 112 081 300	NYLON BUSHING WITH COLLAR (8/11/16x13/2	2
8	BR 910 000 010	NYLON BUSHING WITH COLLAR (25/30/34x30/	4
9	BR 111 080 300	NYLON BUSHING (8,2/16X3)	2
10	BB 011 000 080	STARLOCK 8MM	2
11	MPA 01 073 440	CONTROL PIPE CROSS COUNTRY	2
12	BB 221 104 160	POP PLUG ALU 3.9X16 DIN 7337 A	8
13	BS 501 000 800	NUT M8 DIN 934	2
14	BA 230 010 800	BALL JOINT M8	2
15	BS 521 100 646	SCREW M6X70 DIN 912	1
16	BH 711 020 100	PIPE CLAMP B-10MM	2
17	MPA 01 054 660	HYDRAULIC TUBE	1
18	MPA 01 054 670	HYDRAULIC TUBE	1
20	MPA 01 054 500	REINFORCEMENT PLATE	2
21	BS 512 001 030	BOLT M10X30 DIN 933	4
22	BS 531 001 000	WASHER M10 DIN 125	34
23	BS 502 001 000	SELF LOCKING NUT M10 DIN 985	18
24	BW 815 072 340	RUBBER TRACK	2
25	MPA 01 054 470	SUPPORT TIGHTNER RUBBER TRACK	2
26	BS 512 001 020	BOLT M10X20 DIN 933	2
27	BS 533 001 000	LOCK WASHER M10 DIN 127B	2
28	BS 532 010 305	WASHER M10X30X2.5	2
29	BW 622 725 002	WHEEL	2
30	MPA 01 054 450	SUPPORT WHEELS	1
31	BS 533 000 800	LOCK WASHER M8 DIN 127B	6
32	BS 512 000 825	BOLT M8X25 DIN 933	4
33	MPA 01 054 490	SUPPORT	1
34	BS 501 001 000	NUT M10 DIN 934	2
35	MPA 01 054 640	INSIDE SPACER	4
36	BW 611 520 002	DIABOLO	4
37	MPA 01 054 630	OUTSIDE SPACER	4
38	MPA 01 054 620	DIABOLO TUBE	4
39	BS 511 001 057	BOLT M10	4
40	BR 021 140 400	CAP 40X40	2
41	BH 513 111 004	BANJO 10Lx1/4"	4

42	BH 514 100 804	REDUCTION STUD (M-F) 1/2"-1/4"	4
43	BS 531 001 200	WASHER M12 DIN 125	16
44	BS 512 001 240	BOLT M12X40 DIN 933	4
45	MPA 01 054 460	SPROCKET	2
46	BS 511 001 242	BOLT M12X50 DIN 931	8
47	BS 512 000 820	BOLT M8X20 DIN 933	2
48	BS 532 008 356	WASHER M8X35X3	2
49	BA 281 504 502	HUB REAR WHEEL Ø12,5MM	2
50	BS 502 001 200	SELF LOCKING NUT M12 DIN 985	12
51	MPA 01 054 480	SUPPORT HYDR. ENGINE	1
52	BS 511 001 044	BOLT M10X60 DIN 931	6
53	BH 331 525 000	HYDRAULIC ENGINE MR N 250 CD	2
54	MPA 01 054 680	HYDRAULIC TUBE	1
55	MPA 01 054 690	HYDRAULIC TUBE	1
56	BS 512 001 025	BOLT M10X25 DIN 933	4
57	BS 512 001 050	BOLT M10X100 DIN 933	2
58	MPA 01 051 325	SUPPORT FIXATION	1
59	BS 531 000 600	WASHER M6 DIN 125	2
60	BS 502 000 600	SELF LOCKING NUT M6 DIN 985	2
61	BS 554 100 616	BOLT M6X16 DIN 603	1

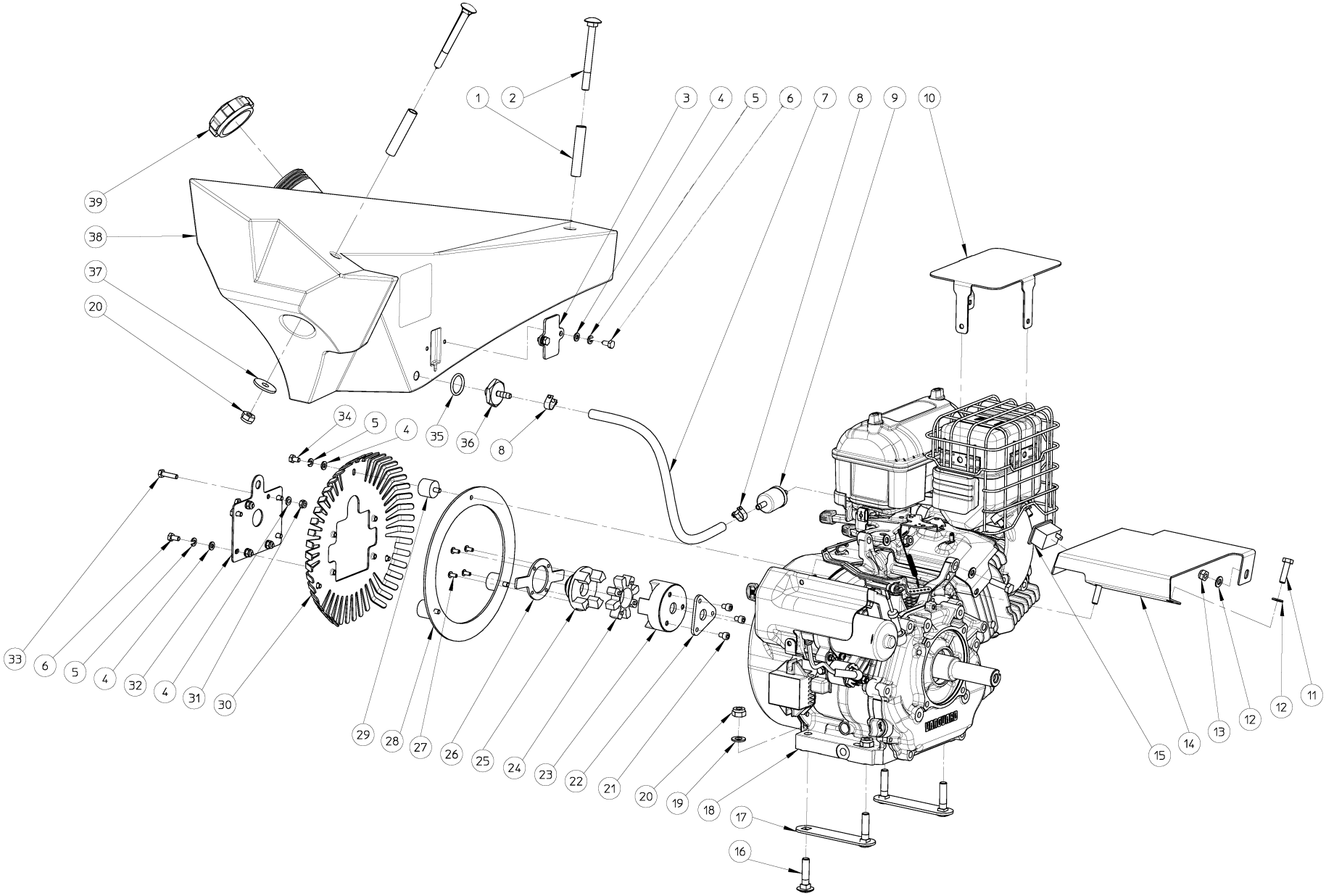

ENGINE

MOTEUR VANGUARD – PROF 6 ZR CC OR					
NO	MMA 01 054 240	REV	2	DATE	2020/07/13

ELIET MANUAL

PROF 6

MMA 01 054 240 **ENGINE VANGUARD - PROF 6 ZR CC OR**

NUMERO	ARTICLE	DESCRIPTION	QUANTITÉ
1	MPA 01 054 530	SPACER	2
2	BS 554 101 050	BOLT M10	2
3	BR 910 001 040	SUPPORT	1
4	BS 531 000 600	WASHER M6 DIN 125	13
5	BS 533 000 600	LOCK WASHER M6 DIN 127B	9
6	BS 512 000 612	BOLT M6X12 DIN 933	6
7	BR 202 007 045	FUEL TUBE	1
8	BT 670 111 130	HOSE CLAMP 11X13MM	2
9	BM 260 493 629	FUEL FILTER	1
10	MPA 01 054 930	PROTECTION EXHAUST	1
11	BS 512 000 830	BOLT M8X30 DIN 933	4
12	BS 531 000 800	WASHER M8 DIN 125	8
13	BS 502 000 800	SELF LOCKING NUT M8 DIN 985	4
14	MPA 01 054 900	ENGINE PLATE	1
15	BE 412 430 000	MAINTENANCE METER	1
16	BS 554 101 041	BOLT M10X45 DIN603	4
17	MPA 01 054 880	ENGINE SUPPORT PLATES	2
18	BM 201 314 002	ENGINE 14HP	1
19	BS 531 001 000	WASHER M10 DIN 125	4
20	BS 502 001 000	SELF LOCKING NUT M10 DIN 985	6
21	BS 521 100 608	BOLT UMBRACO M6	3
22	MPA 01 054 990	CENTRE PIECE	1
23	MPA 01 055 120	ELASTIC COUPLING (ENGINE SIDE)	1
24	BA 201 240 000	ELASTIC COUPLING RUBBER FLECTOR	1
25	BA 201 220 101	ELASTIC COUPLING ALU FLANGE (PUMP SIDE	1
26	MPA 01 073 720	ROTAION MEASURING POINT	1
27	BB 221 005 100	POP PLUG STEEL 4.8X10 DIN 7337 A	4
28	MPA 01 054 610	VENTILATOR REINFORCEMENT	1
29	BR 600 225 201	ANTIVIBRATION BLOCKS 25X20B M6X10	3
30	MPA 01 054 600	ENGINE PUMP SUPPORT	1
31	BS 502 000 600	SELF LOCKING NUT M6 DIN 985	4
32	MPA 01 054 780	SUPPORT PUMP SENSOR	1
33	BS 512 000 625	BOLT M6X25 DIN 933	4
34	BS 512 000 610	BOLT M6X10 DIN 933	3
35	BH 812 249 350	O-RING Ø 24,99 X 3,53 MM VITON	1
36	MPA 01 311 210	TAILPIECE	1
37	BS 532 010 356	WASHER M10X35X3	2
38	BY 717 212 011	FUEL TANK 11L	1
39	BH 720 505 585	CAP FOR TANK	1
49	BS 511 041 125	BOLT UNF	1

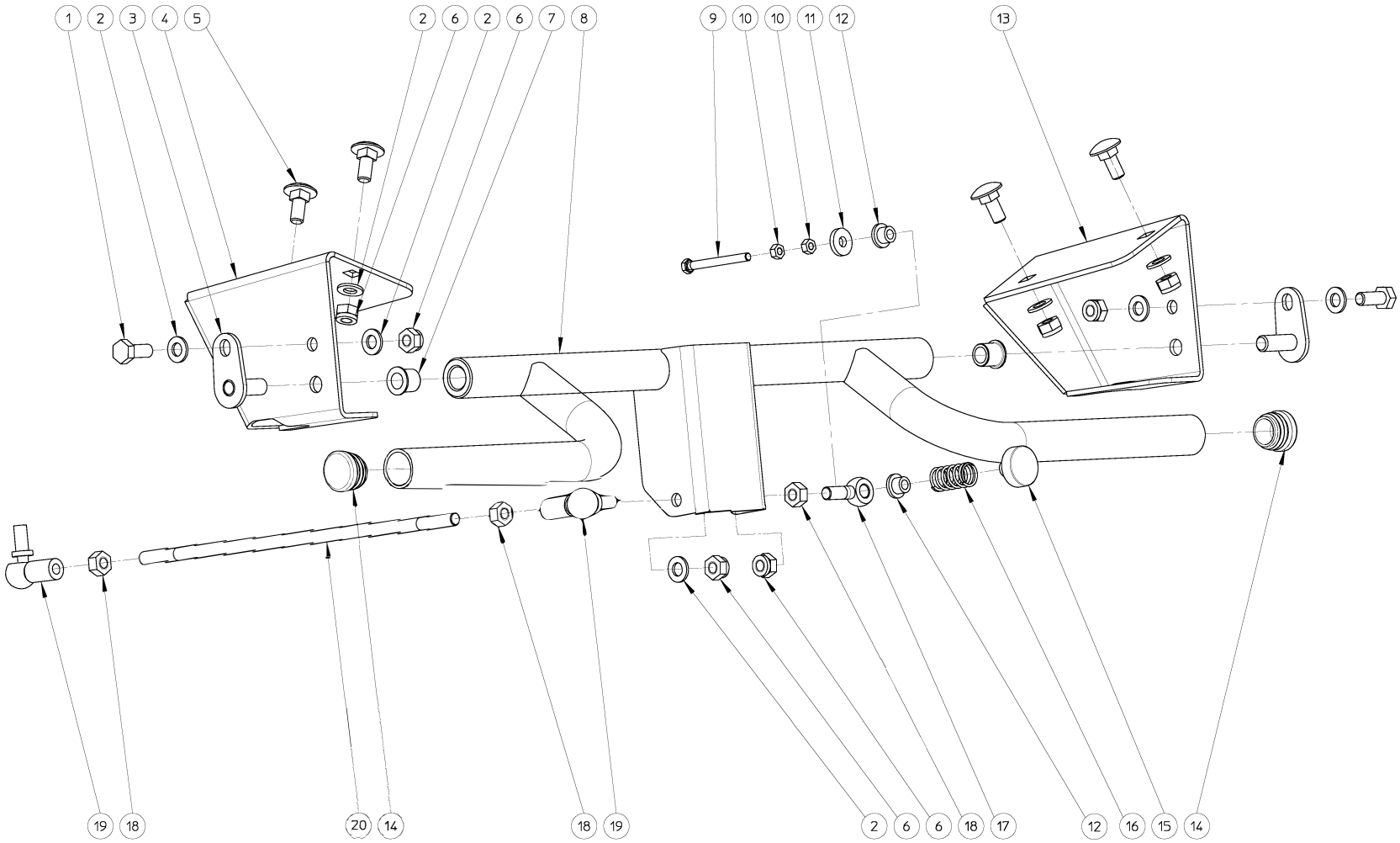

COMMAND INTAKE ROLL – PROF 6 OR					
NO	MMA 01 054 260	REV	1	DATE	2020/09/02

ELIET MANUAL

PROF 6

MMA 01 054 260 **COMMAND INTAKE ROLL - PROF 6 OR**

NUMBER	ARTICLE	DESCRIPTION	QUANTITY
1	BS 512 000 820	BOLT M8X20 DIN 933	2
2	BS 531 000 800	WASHER M8 DIN 125	9
3	MPA 01 440 600	FIXATION PART	2
4	MPA 01 054 960	SUPPORT TRACTION LEFT SIDE	1
5	BS 554 100 820	BOLT M8X20 DIN 603	4
6	BS 502 000 800	SELF LOCKING NUT M8 DIN 985	8
7	BR 112 101 490	NYLON BUSHING WITH COLLAR (10/14/17.5x1	2
8	MPA 01 054 170	COMMAND INTAKE ROLL	1
9	BS 512 000 542	BOLT M5	1
10	BS 501 000 500	NUT M5 DIN 934	2
11	BS 531 200 600	WASHER M6 DIN 7349	1
12	BR 112 060 800	NYLON BUSHING WITH COLLAR (6/10/15x8.5/2	2
13	MPA 01 054 950	SUPPORT TRACTION RIGHT SIDE	1
14	BR 020 501 250	TUBE CAP Ø 25MM	2
15	BE 120 040 070	MAGNET MAESTRO	1
16	BV 911 000 050	COMPRESSION SPRING 1.5 X 15 X 28	1
17	BS 551 000 830	EYE BOLT M8X30 DIN 444	1
18	BS 501 000 800	NUT M8 DIN 934	3
19	BA 230 010 800	BALL JOINT M8	2
20	MPA 01 054 870	COMMAND DISTRIBUTION BLOCK	1