Product Description:Tractor
Model Number:TR3800E-B
Service Item Number:F610009001S01
Version:A
Issue Date: 2023/11/09

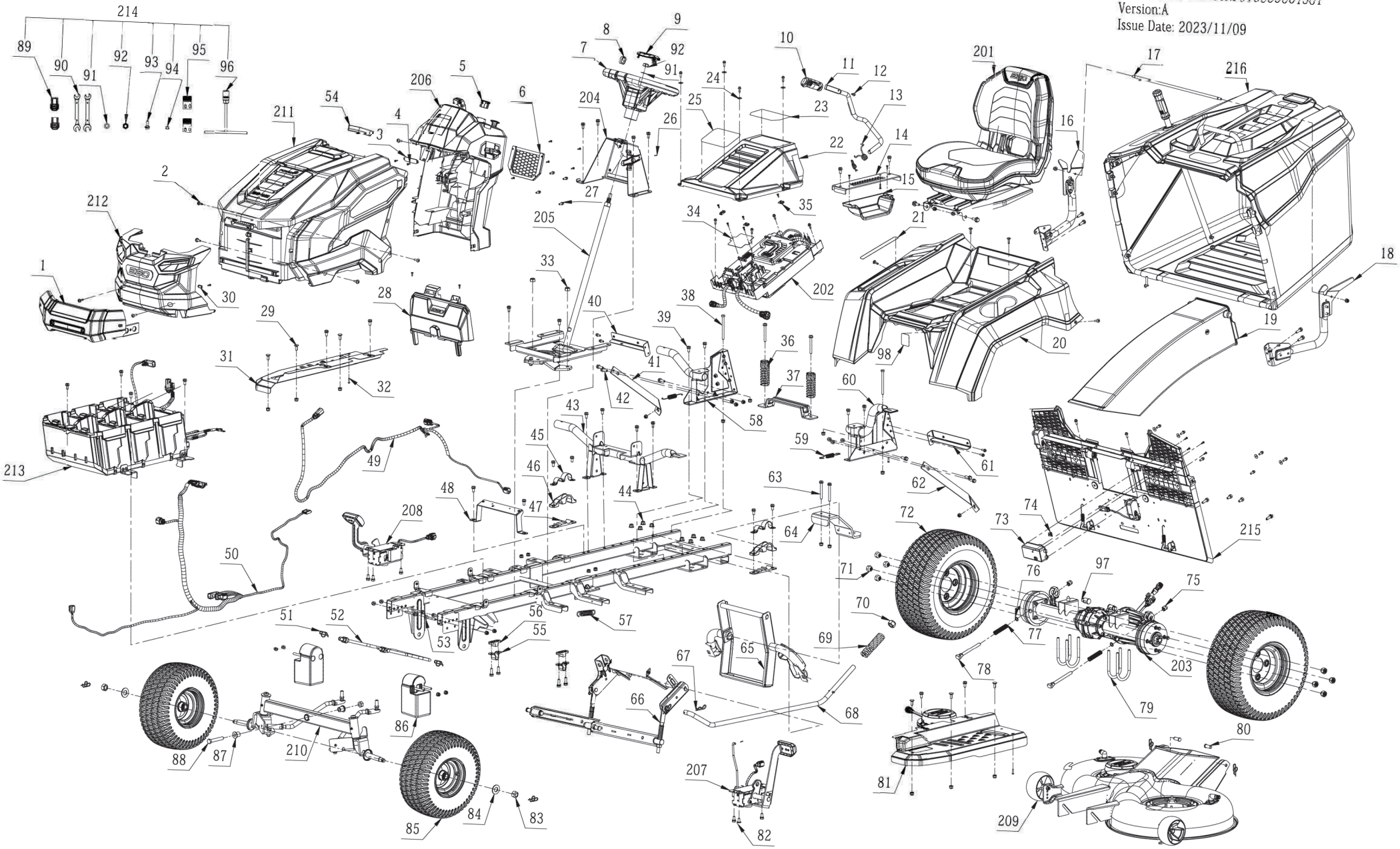

Index 1-1	Art. No.	Description EN	Partnumber	QTY in machine
1	2850198001	Front Frame Assembly	2850198001	1
2	5611130001	Hexalobular Socket Tapping Screw	5611130001	15
3	3134123001	Locking Plate	3134123001	1
4	5620377003	Hexagon Socket Screw	5620377003	16
5	3134435001	Bushing	3134435001	1
6	2850266001	Protecting Net Assembly	2850266001	1
7	3403459001	Steering Wheel Assembly	3403459001	1
8	3134267001	Decorative Ring	3134267001	1
9	3323511001	Decorative Cover	3323511001	1
10	3134257001	Adjusting Handle	3134257001	1
11	3708920001	Handle Lever	3708920001	1
12	5610388001	Hexalobular Socket Thread Forming Screw	5610388001	1
13	3667857001	Torsion Spring	3667857001	1
14	3708913001	Depth Stop Plate	3708913001	1
15	3134839001	Splash Guard	3134839001	1
16	2850397001	Right Bracket Assembly	2850397001	1
17	5640552001	Double Threaded Connecting Rod	5640552001	1
18	2850396001	Left Bracket Assembly	2850396001	1
19	3135015001	Blower Tube	3135015001	1
20	3134999002	Middle Cover	3134999002	1
21	2246023002	Nameplate	2246023002	1
22	3135002002	Top Cover	3135002002	1
23	2246157001	Nameplate	2246157001	1
24	5650017011	Plain Washer	5650017011	4
25	2246158001	Nameplate	2246158001	1
26	5670184002	Pin	5670184002	2
27	5611051001	Hexagon Flange Head Thread Forming Screw	5611051001	14
28	3134552001	Decorative Cover	3134552001	1
29	5640358001	Small Round Head Low Square Neck Bolt	5640358001	6
30	3700367001	Cord Anchorage	3700367001	1
31	3708858001	Pedal	3708858001	1
32	5620157006	Hexagon Socket Screw	5620157006	4
33	5630519001	Lock Nut	5630519001	2
34	3708563001	Close Cover	3708563001	1
35	3135103001	Fixed Unit	3135103001	2
36	3660809001	Compression Spring	3660809001	2
37	3709331001	Intermediate Support	3709331001	1
38	5640302001	Hexagon Head Bolt	5640302001	2
39	5640360001	Hexagon Flange Head Thread Forming Screw	5640360001	35
40	3709339001	Angle Support	3709339001	1
41	3709329001	Support	3709329001	1
42	5640354001	Flange Bolt-Large Series	5640354001	4
43	2829349001	Base Assembly	2829349001	1
44	5630267001	Nut	5630267001	8
45	3708866001	Pressure Plate	3708866001	2
46	3134126001	Fixed Unit	3134126001	2
47	3134127001	Bottom Board	3134127001	2
48	3708597001	PCB Holder	3708597001	1
49	4861301001	Wiring Harness	4861301001	1
50	4861221001	Bus Wire Harness Assembly	4861221001	1
51	5670561002	Split Pin	5670561002	7
52	2851204001	Hanger Rod Assembly	2851204001	1
53	5640353001	Flange Bolt-Large Series	5640353001	4
54	3135765001	Screw Cover	3135765001	1
55	3707307001	Pressure Plate	3707307001	2
56	3521236001	Support Base	3521236001	2
57	3667946001	Tension Spring	3667946001	1
58	2850390001	Base Assembly	2850390001	1
59	3667982001	Tension Spring	3667982001	1
60	2850391001	Base Assembly	2850391001	1
61	3709340001	Angle Support	3709340001	1
62	3709338001	Support	3709338001	1

63	5640363002	Flange Bolt-Large Series	5640363002	4
64	3709363001	Hitch	3709363001	1
65	2850392001	Rocker Assembly	2850392001	1
66	2850678001	Lift Shaft Assembly	2850678001	1
67	5670753001	Spring Pin	5670753001	1
68	2829443001	Connecting Rod Assembly	2829443001	1
69	3667865001	Compression Spring	3667865001	1
70	5630511001	Nut	5630511001	1
71	5630516001	Conical Nut	5630516001	8
72	2850138001	Rear Wheel Set	2850138001	2
73	3135724001	Lid Case	3135724001	1
74	3135599001	Wire Holder	3135599001	2
75	5630505001	Hex Nut	5630505001	2
76	5650178001	Washer	5650178001	2
77	3667850001	Compression Spring	3667850001	2
78	5640507001	Bolts for T-Slot	5640507001	2
79	5640559001	U Bolt	5640559001	4
80	5670553001	Pin Shaft	5670553001	2
81	3708859001	Pedal	3708859001	1
82	5640222001	Hexagon Flange Bolt	5640222001	2
83	5630518001	Lock Nut	5630518001	2
84	5650908001	Plain Washer	5650908001	2
85	2829678001	Front Wheel Set	2829678001	2
86	2850639001	Balancing Weight	2850639001	2
87	3580470001	Bushing	3580470001	3
88	5640521001	Hexagon Head Bolt	5640521001	1
89	2827673001	Key Assembly	2827673001	2
90	5680369001	Open-end Wrench	5680369001	2
91	5650703001	Plain Washer	5650703001	1
92	5630070003	Nut	5630070003	3
93	5640510001	Hexagon Flange Head Screw with Shoulder	5640510001	3
94	5630371001	Prevailing Torque Type Hexagon Lock Nut with Flange	5630371001	20
95	2823689001	Quick Connect Coupling	2823689001	1
96	5680368001	Socket Wrench	5680368001	1
97	3555993001	Spindle	3555993001	2
201	2850393002	Seat Assembly	2850393002	1
202	2832134001	Control Electric Assembly	2832134001	1
207	2829440001	Brake Assembly	2829440001	1
208	2829441001	Accelerator	2829441001	1
214	2851141001	Wrench Tool Set	2851141001	1
213	2850682001	Battery Box Assembly	2850682001	1
216	2850576002	Grass Catcher Assembly	2850576002	1

Product Description:Tractor
Model Number:TR3800E-B
Service Item Number:2850393002S01
Version:A
Issue Date: 2023/11/29

201 Seat Assembly

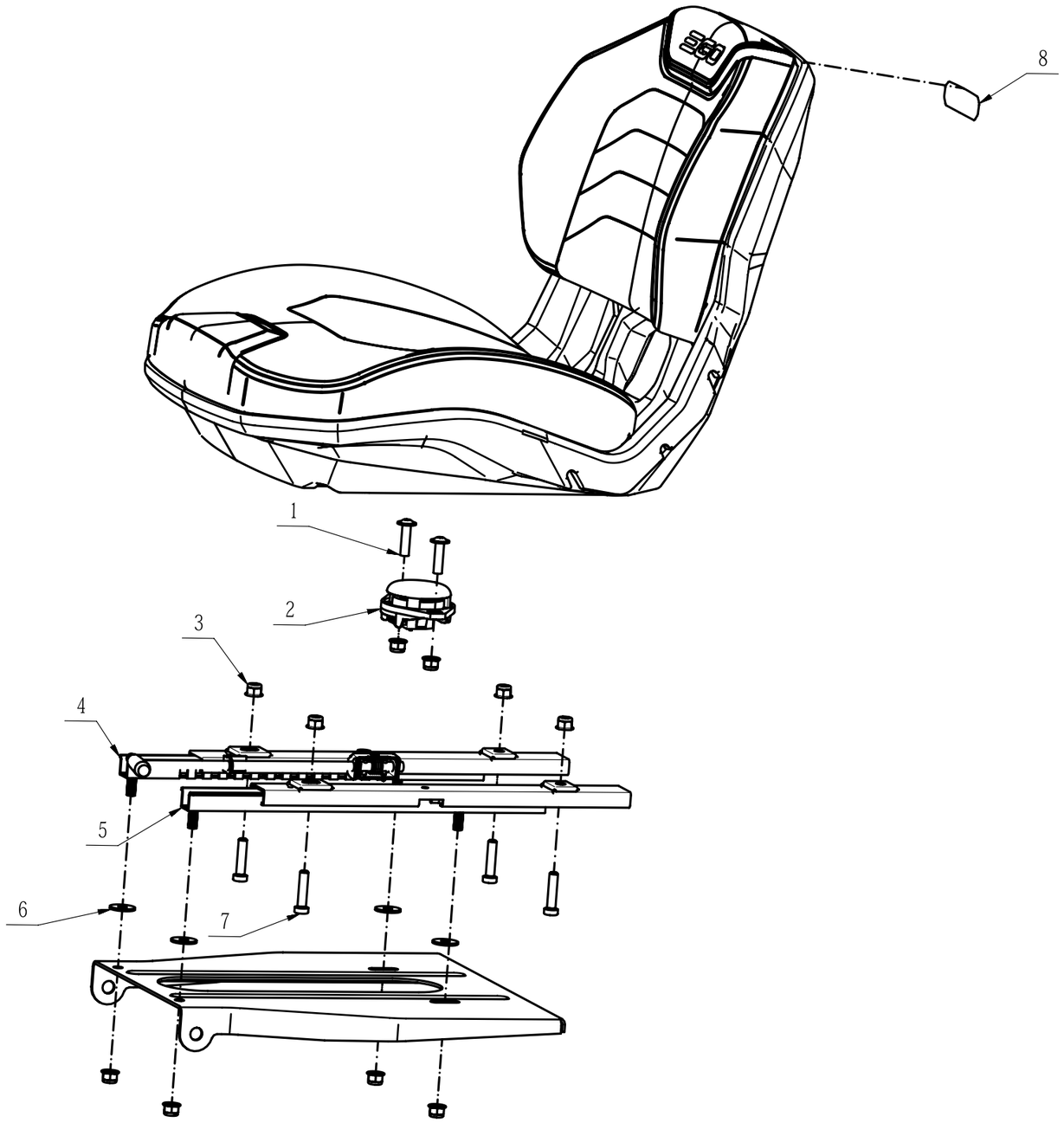

Index2-201	Onderdeelnummer	Description	Partnumber	Qty
201-1	5611121001	Hexagon Socket Button Head Screw	5611121001	2
201-2	4870579001	Switch Assembly	4870579001	1
201-3	5630371001	Prevailing Torque Type Hexagon Lock Nut with Flange	5630371001	10
201-4	2851092001	Right Guide Rail	2851092001	1
201-5	2829522001	Left Guide Rail	2829522001	1
201-6	5650024005	Plain Washer	5650024005	12
201-7	5611175001	Hexagon Socket Head Cap Screw	5611175001	4
201-8	2246018001	Nameplate	2246018001	1

Product Description:Tractor
Model Number:TR3800E-B
Service Item Number:2832134001S01
Version:B
Issue Date: 2024/01/31

202 Control Electric Assembly

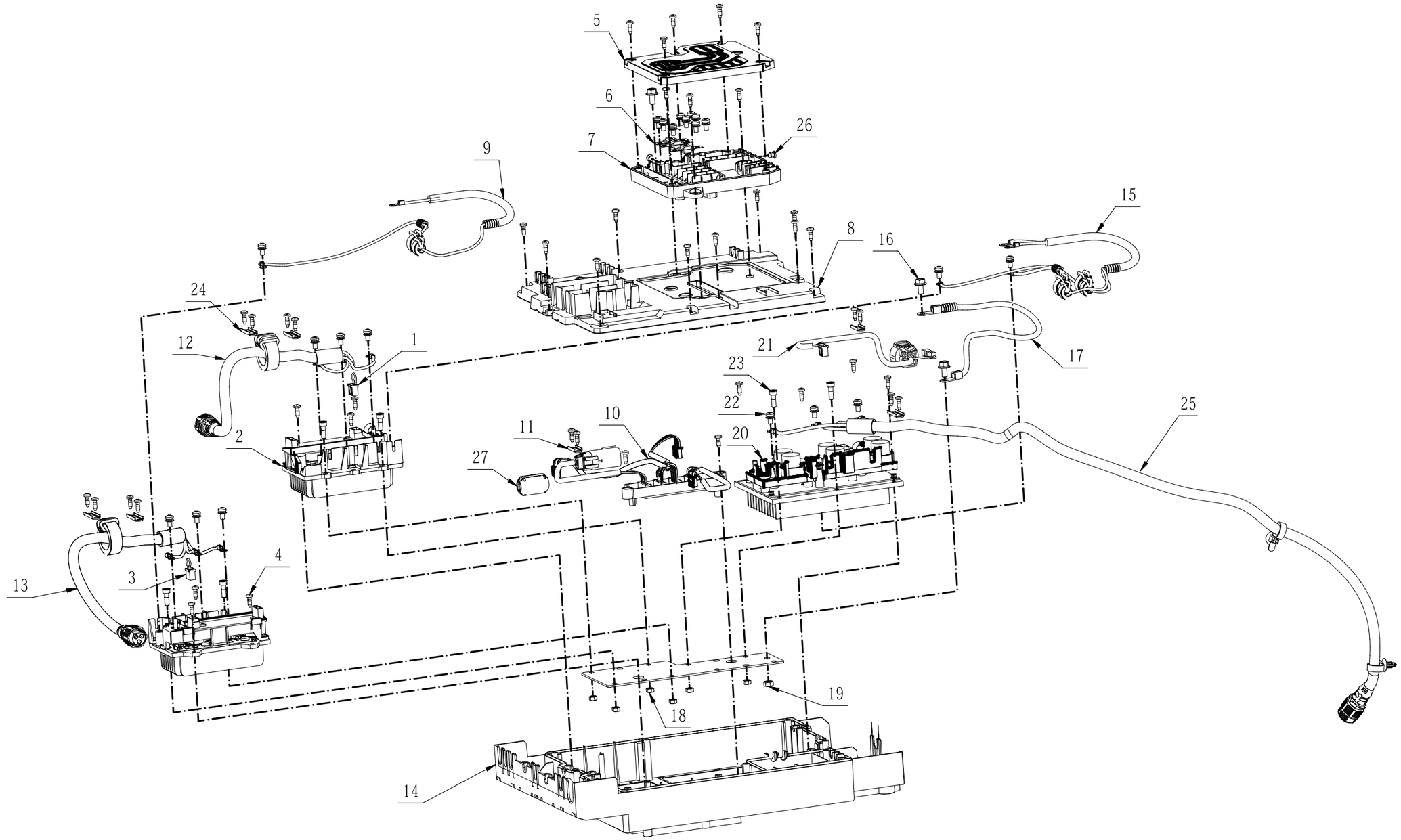

index3-202	Onderdeel nummer	Description	Partnumber	Qty
202-1	4861205001	Motor Wiring Harness	4861205001	1
202-2	2831918001	Motor Driver Electric Assembly	2831918001	2
202-3	4861204001	Motor Wiring Harness	4861204001	1
202-4	5620377003	Hexagon Socket Screw	5620377003	45
202-5	3131053001	Fuse PCB Box	3131053001	1
202-6	4970355001	Fuse	4970355001	3
202-7	2850307001	Base Assembly	2850307001	1
202-8	3135272001	Top Cover	3135272001	1
202-9	4861329001	Host Power Wire Harness	4861329001	1
202-10	2831467001	Connecting Electric Assembly	2831467001	1
202-11	3700367001	Cord Anchorage	3700367001	2
202-12	4861347002	Motor Wire Harness	4861347002	1
202-13	4861347001	Motor Wire Harness	4861347001	1
202-14	3135271001	Lower Housing	3135271001	1
202-15	4861328001	Host Power Wire Harness	4861328001	1
202-16	5640373001	Hex Serrated Flange Screw	5640373001	3
202-17	4860768001	Host Power Wire Harness	4860768001	1
202-18	5630006003	Prevailing Torque Hexagon Nut	5630006003	6
202-19	5630015001	Prevailing Torque Hexagon Nut	5630015001	1
202-20	2831917001	Main Electric Assembly	2831917001	1
202-21	4861364002	Wire Harness	4861364002	1
202-22	5611128001	Screw and Washer Assembly	5611128001	21
202-23	5620019004	Hexagon Socket Screw	5620019004	6
202-24	3707407001	Cord Anchorage	3707407001	5
202-25	4861306001	Motor Wire Harness	4861306001	1
202-26	3133018001	Waterproof Plug	3133018001	2
202-27	3680226001	Magnetic Block	3680226001	1

Product Description:Tractor
Model Number:TR3800E-B
Service Item Number:2850680001S01
Version:A
Issue Date: 2023/11/09

203 Drive Axle Assembly

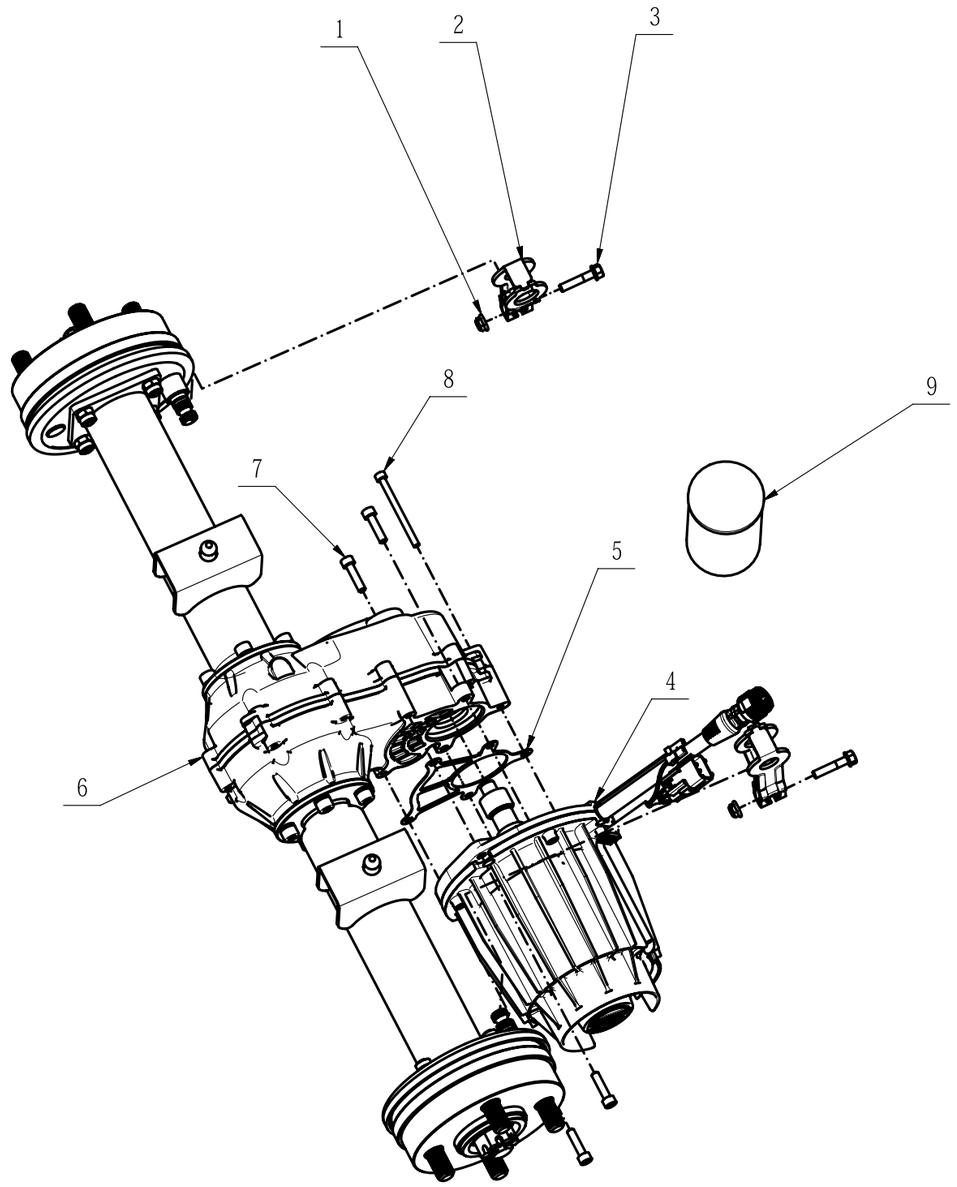

index 4-203	Onderdeelnummer	Description	Partnumber	Qty
203-1	5630244004	Nut	5630244004	2
203-2	3708883001	Rocker Arm	3708883001	2
203-3	5640536001	Flange Bolt	5640536001	2
203-4	2730382002	DC Motor	2730382002	1
203-5	5690612001	Sealing Gasket	5690612001	1
203-6	2850131001	Rear Axle Assembly	2850131001	1
203-7	5620550004	Hexagon Socket Screw	5620550004	4
203-8	5611050001	Hexagon Socket Screw	5611050001	1
203-9	5970163001	Grease	5970163001	1

Product Description:Tractor
Model Number:TR3800E-B
Service Item Number:2850187001S01
Version:A
Issue Date: 2023/11/09

204 Support Plate Assembly

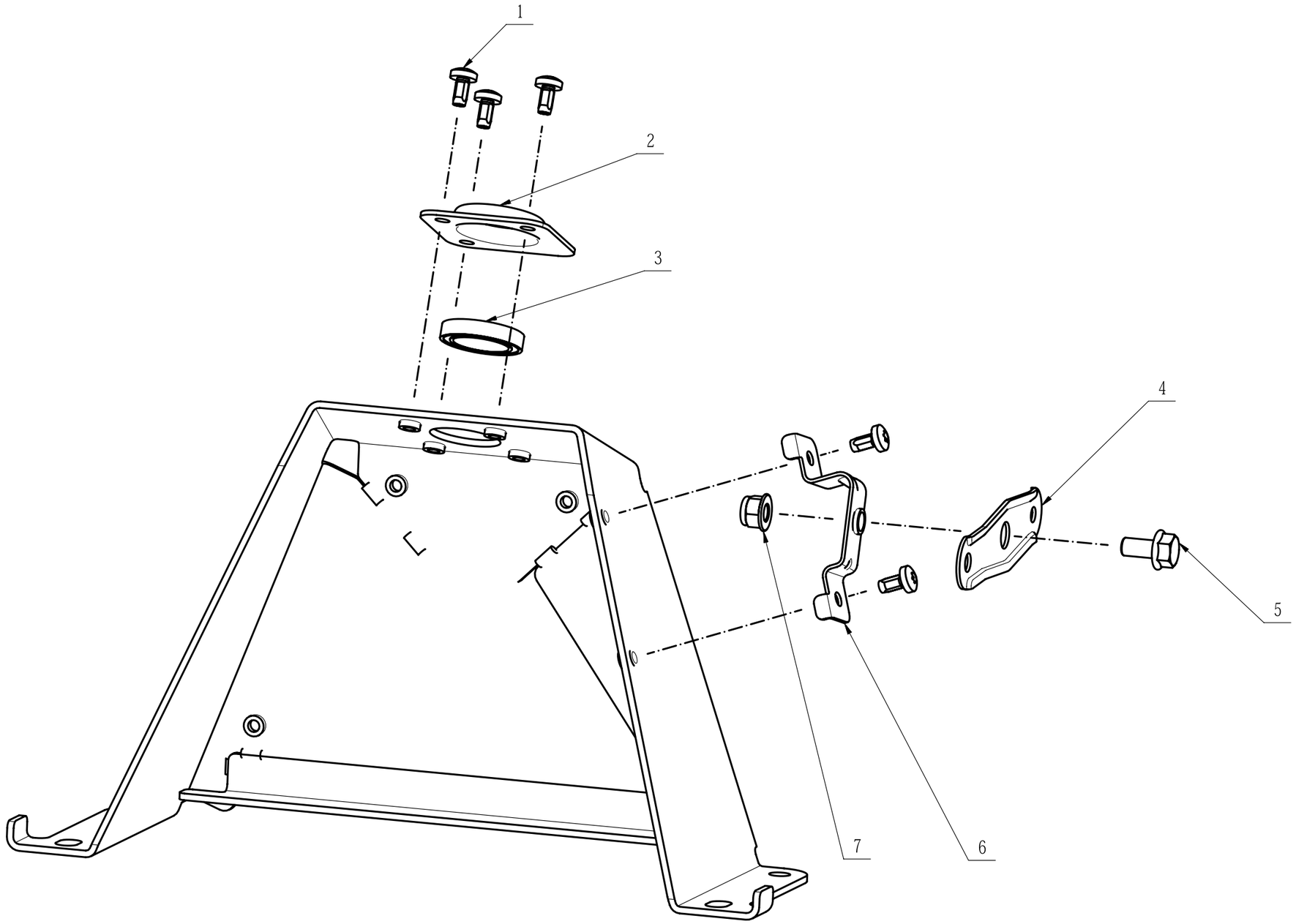

index5-204	Onderdeelnummer	Decription	Partnumber	Qty
204-1	5610388001	Hexalobular Socket Thread Forming Screw	5610388001	5
204-2	3708919001	Bearing Clamping Plate	3708919001	1
204-3	5700252001	Ball Bearing	5700252001	1
204-4	3708905001	Switch-plate	3708905001	1
204-5	5640222001	Hexagon Flange Bolt	5640222001	1
204-6	3708904001	Supporting Structure	3708904001	1
204-7	5630371001	Prevailing Torque Type Hexagon Lock Nut with Flange	5630371001	1

Product Description:Tractor
Model Number:TR3800E-B
Service Item Number:2850186001S01
Version:A
Issue Date: 2023/07/19

205 Spindle Assembly

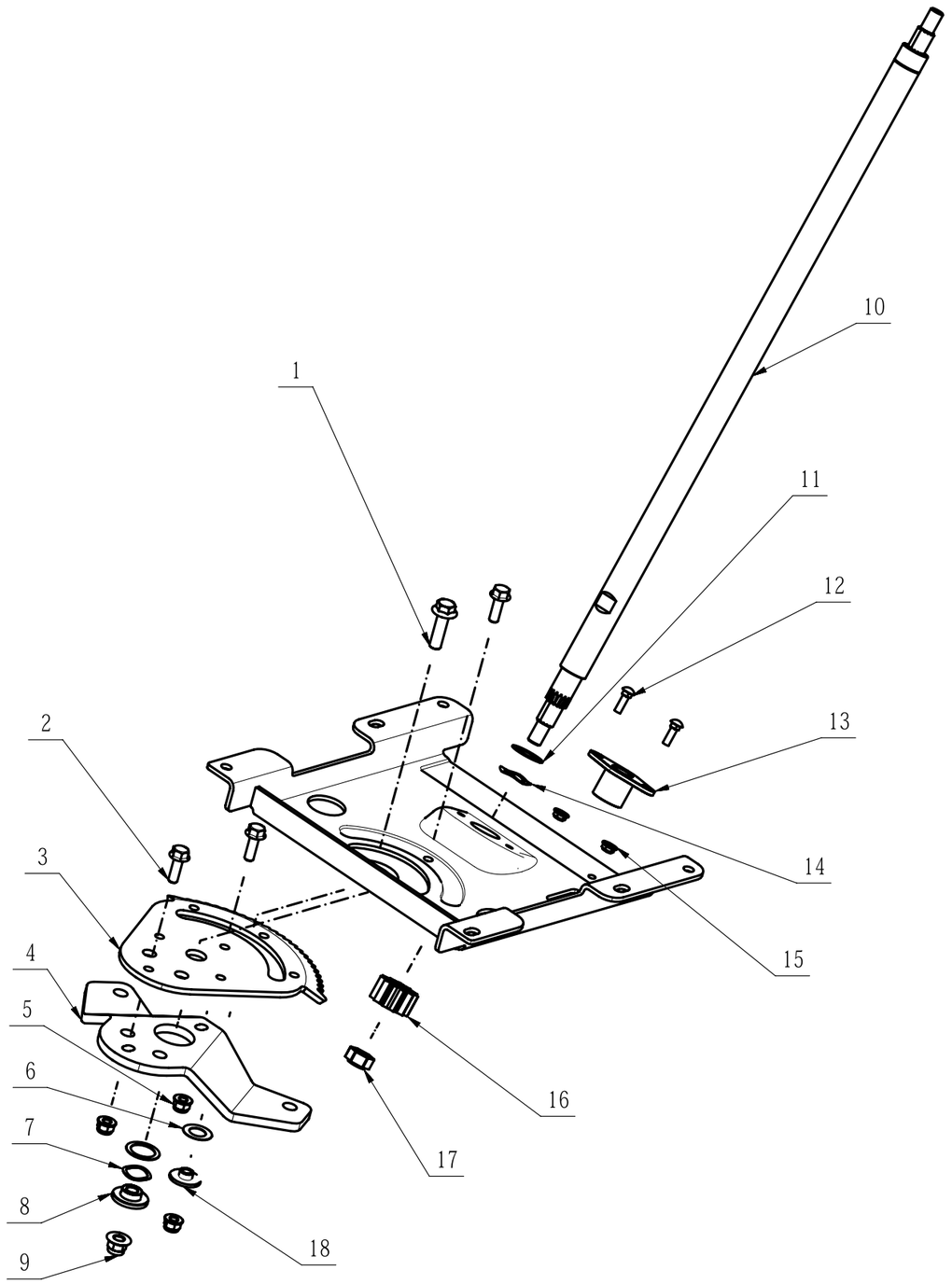

Index6	Onderdeelnummer	Decription	Partnumber	Qty
205-1	5640212002	Bolt	5640212002	1
205-2	5640354001	Flange Bolt-Large Series	5640354001	3
205-3	3708923001	Deflecting Plate	3708923001	1
205-4	3708916001	Connecting Plate	3708916001	1
205-5	5630371001	Prevailing Torque Type Hexagon Lock Nut w	5630371001	3
205-6	5650366001	Washer	5650366001	1
205-7	5650288001	Wave washer	5650288001	1
205-8	3580471001	Bushing	3580471001	1
205-9	5630267001	Nut	5630267001	1
205-10	2850275001	Shaft Assembly	2850275001	1
205-11	5650246001	Washer	5650246001	2
205-12	5640357001	Semicircular Head Square Neck Bolt	5640357001	2
205-13	3522133001	Support Base	3522133001	1
205-14	5650305001	Wave Washer	5650305001	1
205-15	5630244004	Nut	5630244004	2
205-16	3570388001	Spline Gear	3570388001	1
205-17	5630070003	Nut	5630070003	1
205-18	3580472001	Bushing	3580472001	1

Product Description:Tractor
Model Number:TR3800E-B
Service Item Number:2850706002S01
Version:A
Issue Date: 2023/11/09

206 Manual Panel Assembly

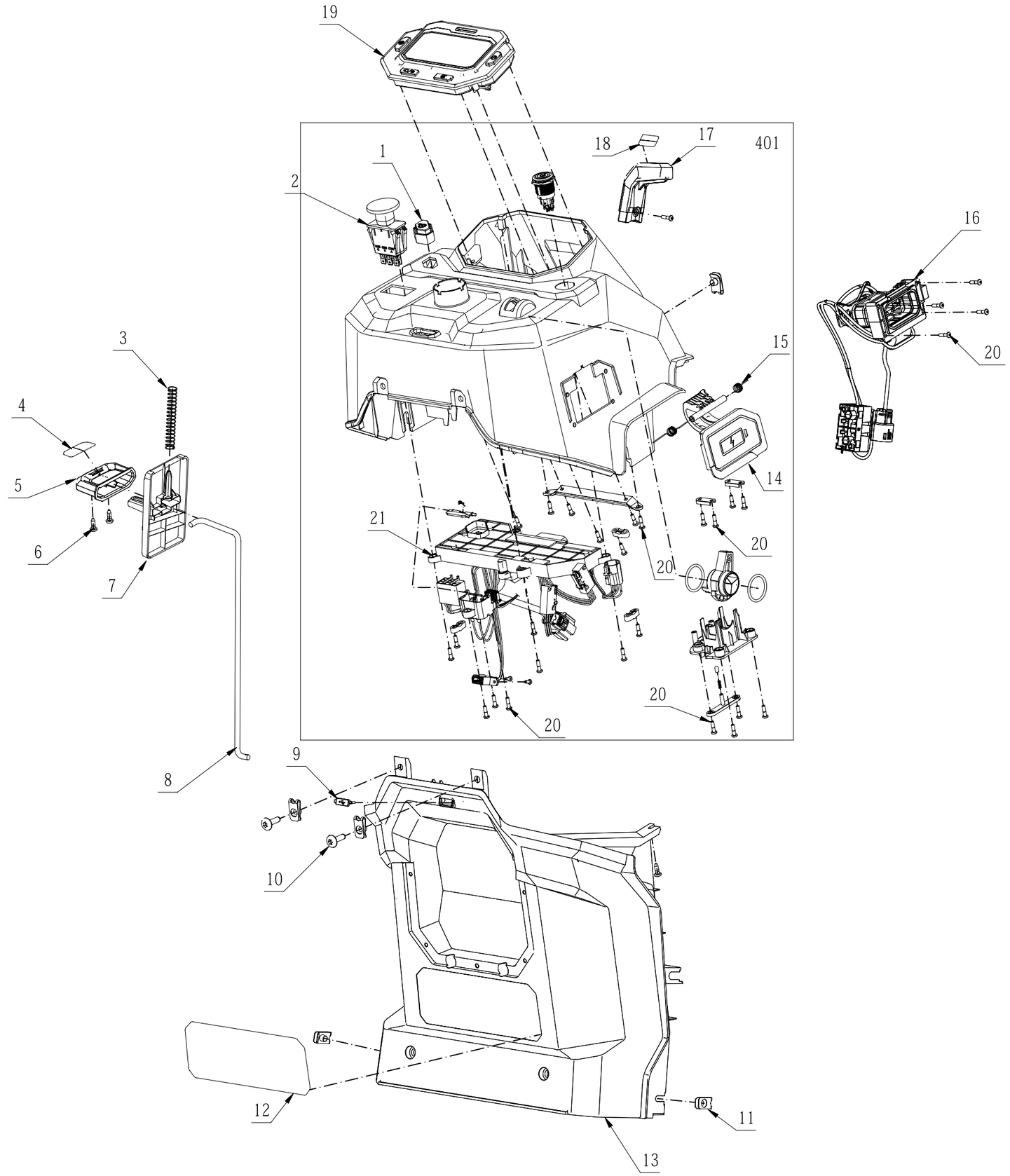

Index 7-206	Onderdeelnummer	Description	Partnumber	Qty
206-1	3134190001	Cruise Button	3134190001	1
206-2	4870762001	Push Switch	4870762001	1
206-3	3667866001	Compression Spring	3667866001	1
206-4	2246017001	Nameplate	2246017001	1
206-5	3134137002	Push Plate	3134137002	1
206-6	5620377003	Hexagon Socket Screw	5620377003	4
206-7	3134138001	Plunge Unit	3134138001	1
206-8	3650312001	Pull Rod	3650312001	1
206-9	3135120001	Rubber Plug	3135120001	1
206-10	5611130001	Hexalobular Socket Tapping Screw	5611130001	2
206-11	5630507001	Anti-stripping Clip	5630507001	5
206-12	2246155001	Nameplate	2246155001	1
206-13	3134186002	Support Base	3134186002	1
206-14	3134179001	Charging Port Cover	3134179001	1
206-15	3660810001	Torsion Spring	3660810001	2
206-16	2829750001	Charging Harness Assembly	2829750001	1
206-17	3134192002	Handle	3134192002	1
206-18	2246016001	Nameplate	2246016001	1
206-19	2829495001	LCD Assembly	2829495001	1
206-20	5610305001	Tapping Screw	5610305001	29
206-21	2831711001	Operation Panel Control Electric Assembly	2831711001	1
206-22	2245663001	Nameplate	2245663001	1
206-401	2851020001	Operation Panel Assembly	2851020001	1

Product Description:Tractor
Model Number:TR3800E-B
Service Item Number:2829440001S01
Version:A
Issue Date: 2023/11/09

207 Brake Assembly

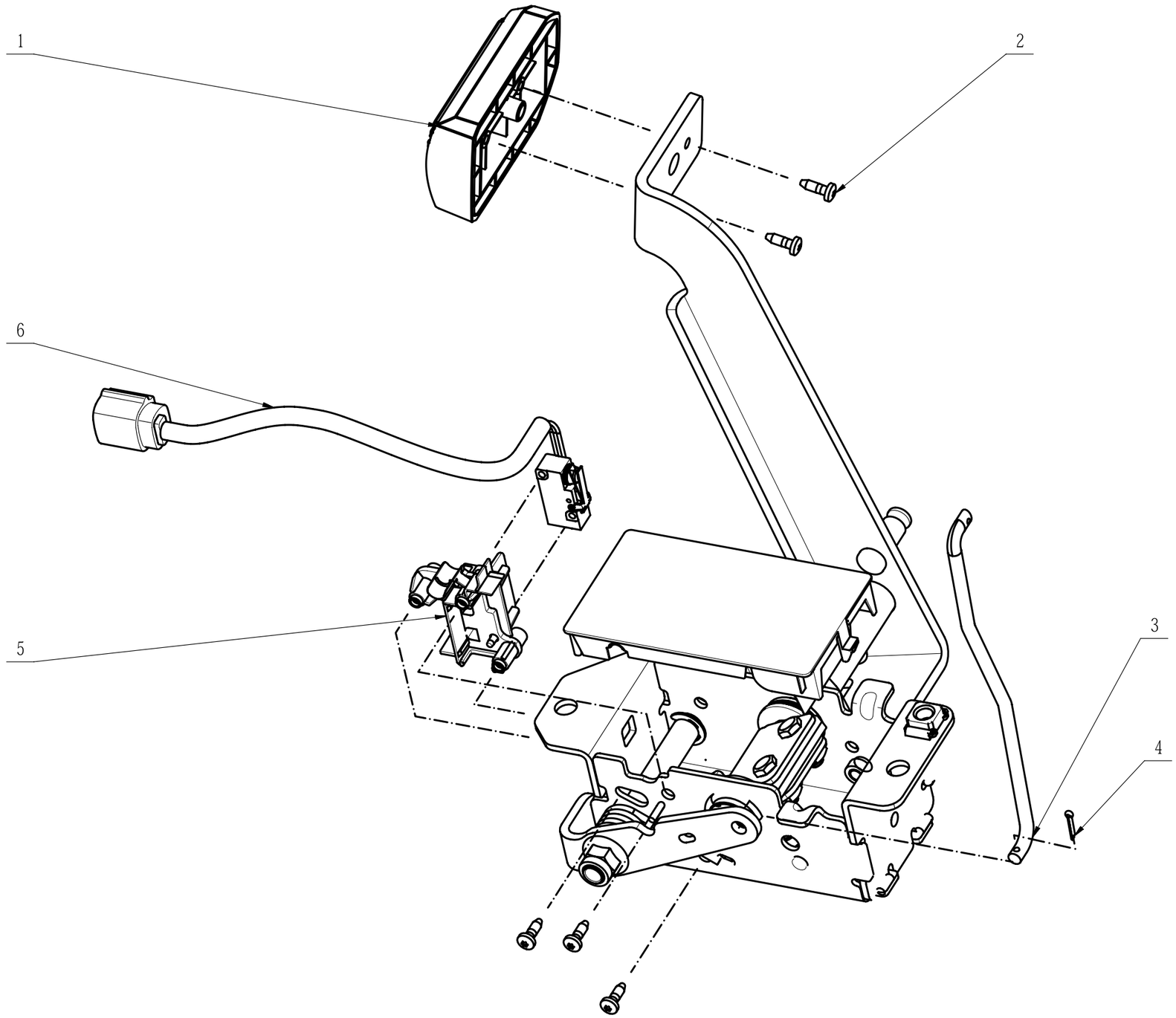

index 8-207	Onderdeelnummer	Description	Partnumber	Qty
207-1	3134128001	Pedal	3134128001	1
207-2	5620377003	Hexagon Socket Screw	5620377003	5
207-3	3650329001	Handspike	3650329001	1
207-4	5670184002	Pin	5670184002	1
207-5	3134130001	Switch Support	3134130001	1
207-6	4870979001	Switch Assembly	4870979001	1

Product Description:Tractor
Model Number:TR3800E-B
Service Item Number:2829441001S01
Version:A
Issue Date: 2023/11/09

208 Accelerator

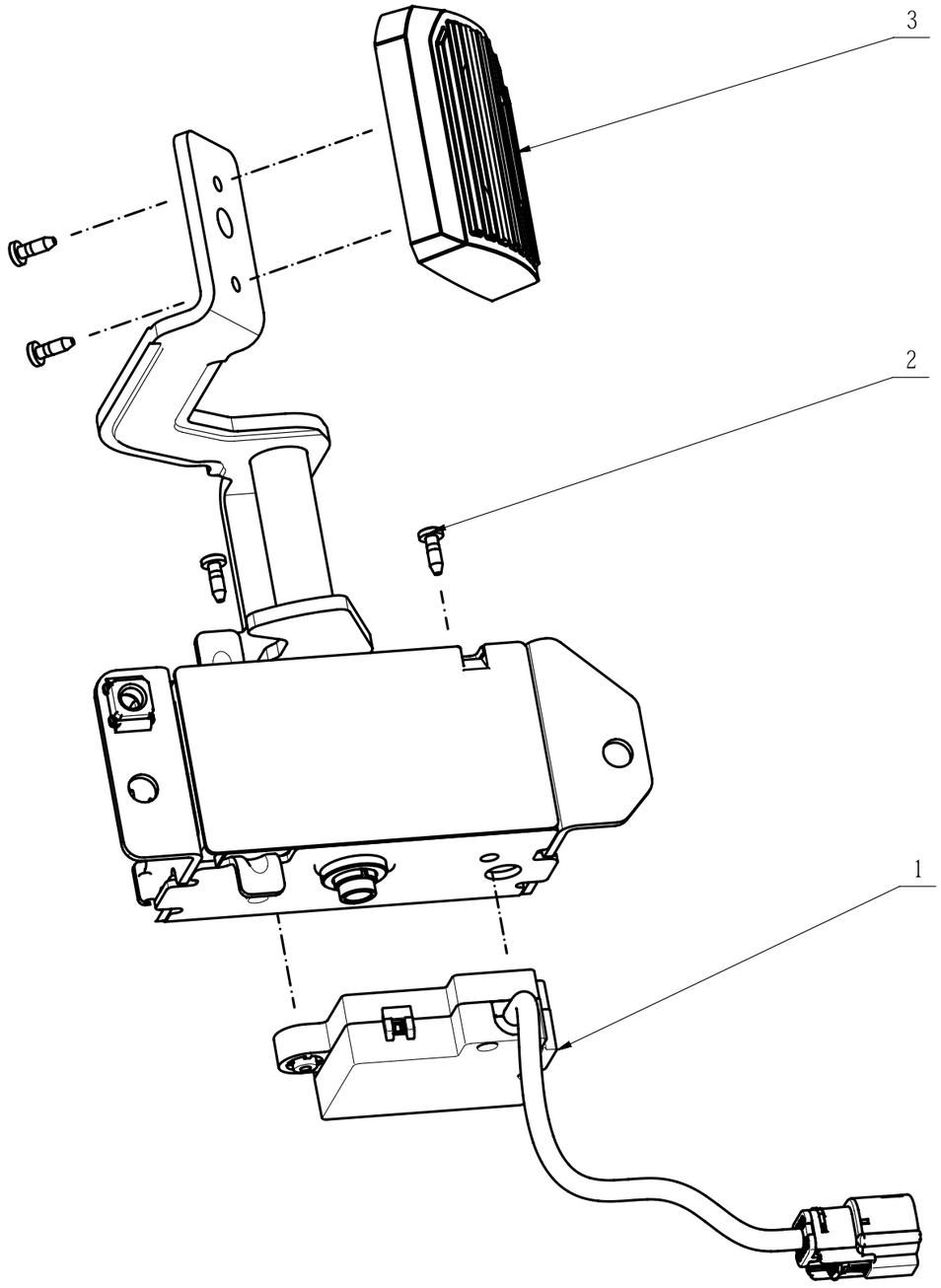

Index 9-208	Onderdeelnummer	Description	Partnumber	Qty
208-1	2831378001	Hall Electric Assembly	2831378001	1
208-2	5620377003	Hexagon Socket Screw	5620377003	4
208-3	3134129001	Pedal	3134129001	1

Product Description:Tractor
Model Number:TR3800E-B
Service Item Number:2829494002S01
Version:A
Issue Date: 2023/11/09

209 Deck Unit

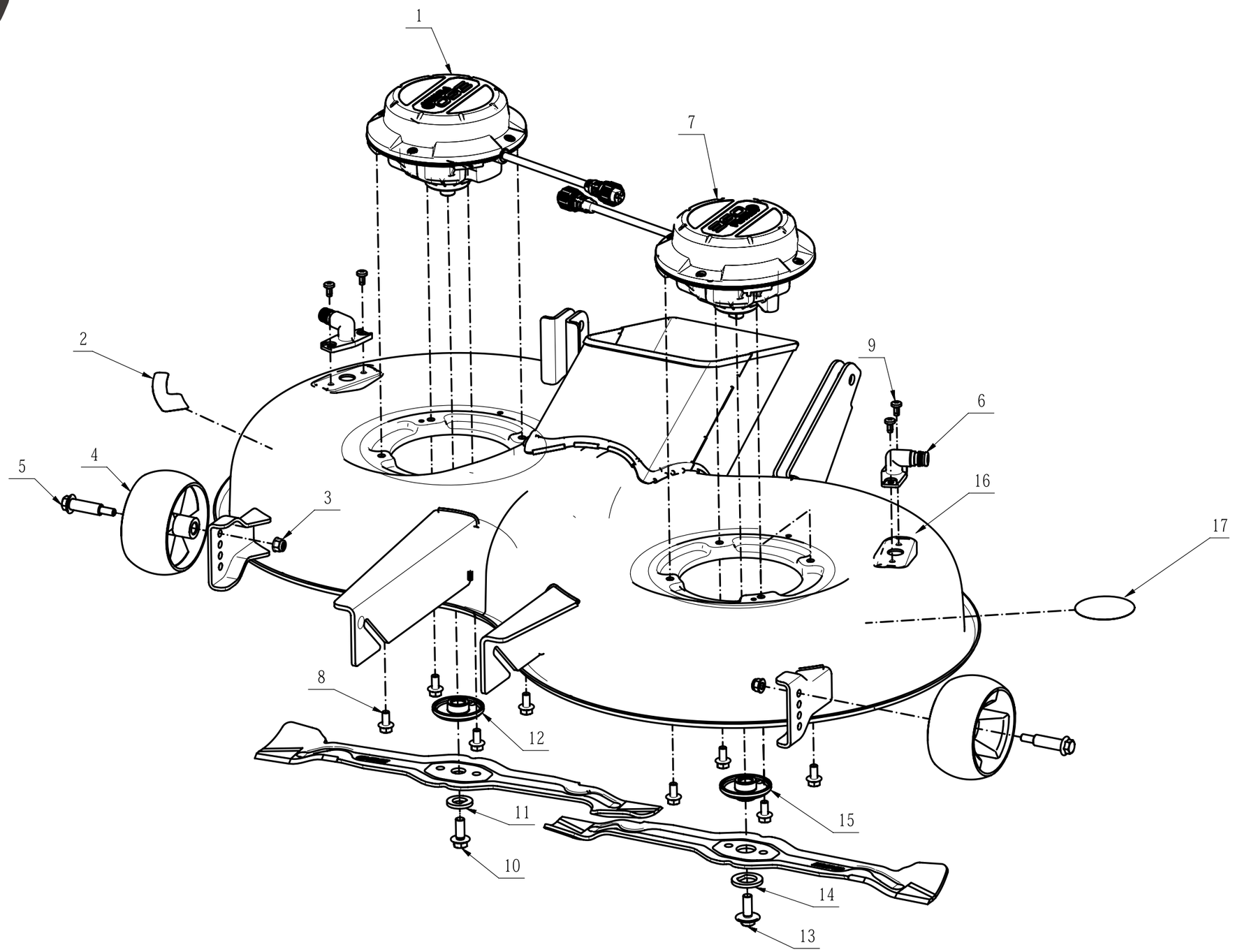

Index 10-209	Onderdeelnummer	Description	Partnumber	Qty
209-1	2730319001	DC Motor	2730319001	1
209-2	2246152001	Nameplate	2246152001	1
209-3	5630371001	Prevailing Torque Type Hexagon Lock Nut with Flange	5630371001	2
209-4	3131072001	Roller Wheel	3131072001	2
209-5	5640352001	Hexagon Flange Bolt	5640352001	2
209-6	2823718001	Outlet Nozzle Assembly	2823718001	2
209-7	2730414001	DC Motor	2730414001	1
209-8	5640222001	Hexagon Flange Bolt	5640222001	8
209-9	5610388001	Hexalobular Socket Thread Forming Screw	5610388001	4
209-10	5640226001	Flange Bolt	5640226001	1
209-11	5650510001	Washer	5650510001	1
209-12	3580113001	Flange	3580113001	1
209-13	5640557001	Flange Bolt	5640557001	1
209-14	5651099001	Plain Washer	5651099001	1
209-15	3580547001	Flange	3580547001	1
209-16	2850065002	Deck Unit	2850065002	1
209-17	2240127004	Label	2240127004	1

Product Description:Tractor
Model Number:TR3800E-B
Service Item Number:2850185001S01
Version:A
Issue Date: 2023/07/18

210 Front Axle

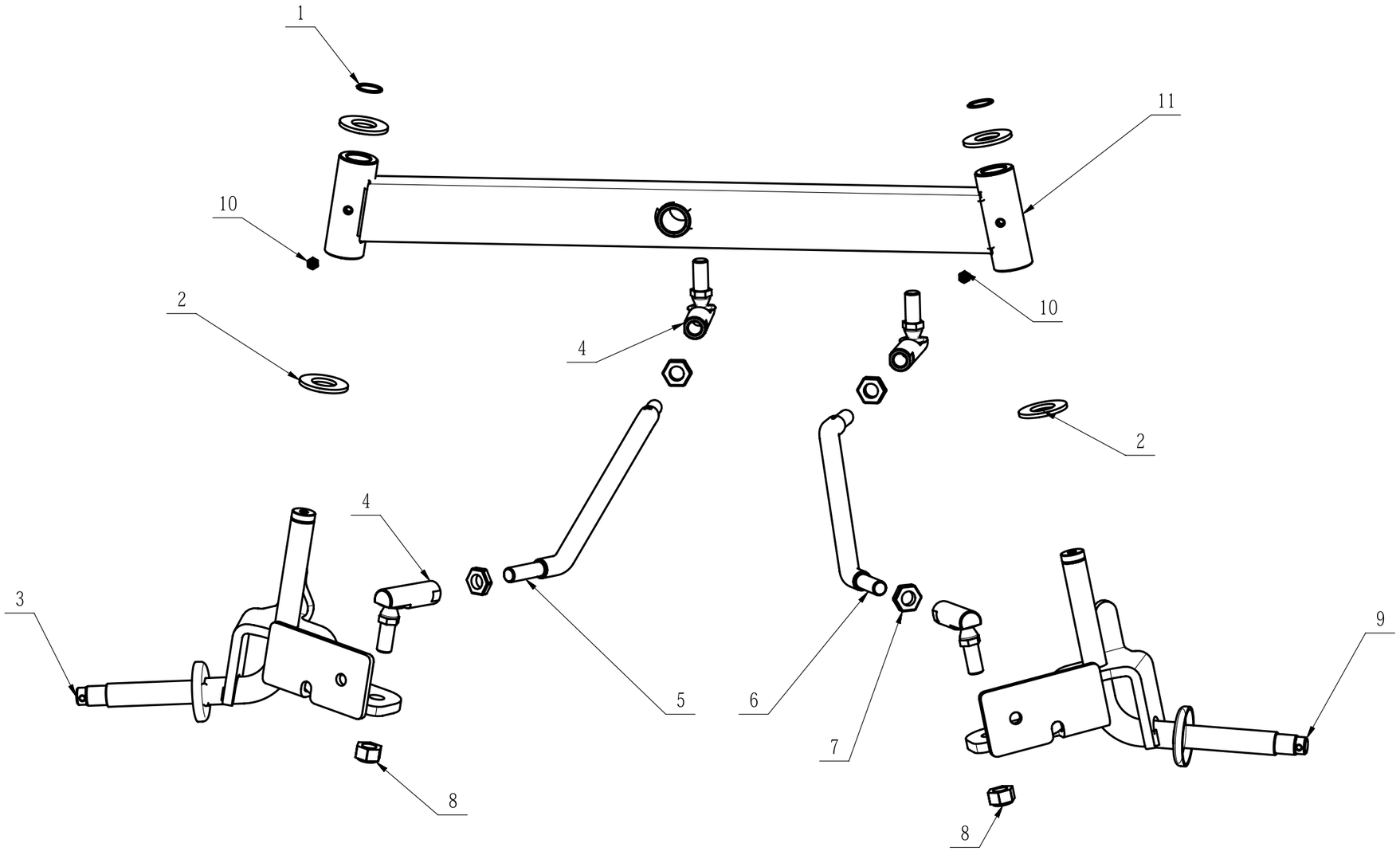

Index 11-210	Onderdeelnummer	Description	Partnumber	Qty
210-1	5660384001	Spiral Ring For Shaft	5660384001	2
210-2	5650908001	Plain Washer	5650908001	4
210-3	2829425001	Front Wheel Bracket Assembly	2829425001	1
210-4	5700539001	Spherical Plain Bearings	5700539001	4
210-5	3708922001	Right Drag Link	3708922001	1
210-6	3708921001	Left Drag Link	3708921001	1
210-7	5630520001	Hexagon Thin Nut	5630520001	4
210-8	5630519001	Lock Nut	5630519001	2
210-9	2829424001	Front Wheel Bracket Assembly	2829424001	1
210-10	5640520001	Straight Hydraullc Grease Nipples	5640520001	2
210-11	2829423001	Front Axle	2829423001	1

Product Description:Tractor
Model Number:TR3800E-B
Service Item Number:2850218002S01
Version:B
Issue Date: 2023/01/31

211 Protective Cover Assembly

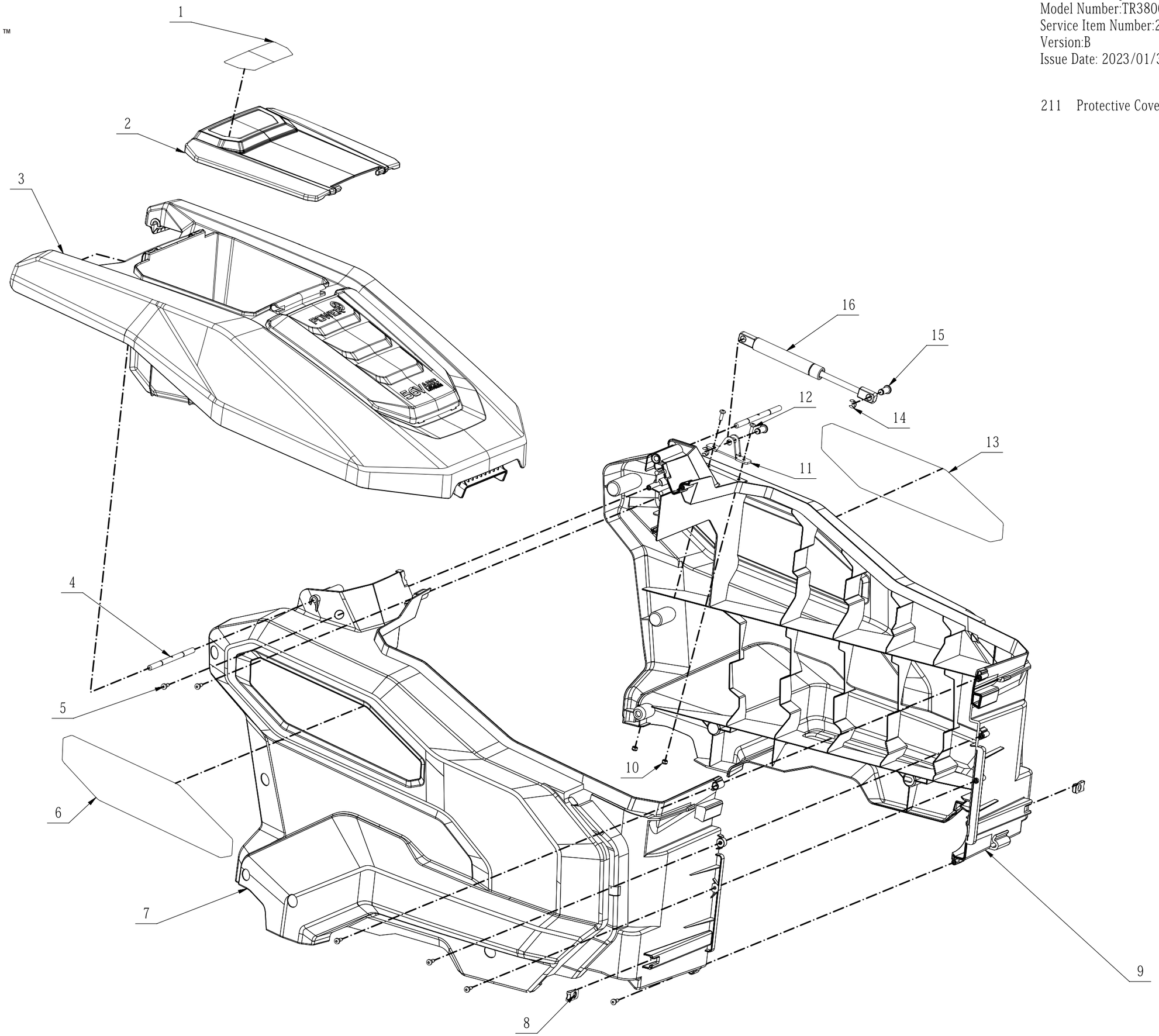

Index 12-211	Onderdeelnummer	Description	Partnumber	Qty
211-1	2246015001	Nameplate	2246015001	1
211-2	3403493002	Lid Case	3403493002	1
211-3	2850158002	Battery Box Cover Assembly	2850158002	1
211-4	5670564001	Pin Shaft	5670564001	2
211-5	5620377003	Hexagon Socket Screw	5620377003	6
211-6	2246020002	Nameplate	2246020002	1
211-7	3134185002	Right Cover	3134185002	1
211-8	5630507001	Anti-stripping Clip	5630507001	2
211-9	3134178002	Left Cover	3134178002	1
211-10	5630231001	Nut	5630231001	2
211-11	3707349001	Support Base	3707349001	1
211-12	5620477003	Hexagon Lobular Screw	5620477003	2
211-13	2246020001	Nameplate	2246020001	1
211-14	5660305001	E Ring	5660305001	2
211-15	5670559001	Pin Shaft	5670559001	2
211-16	3660805001	Gas Spring	3660805001	1

Product Description:Tractor
Model Number:TR3800E-B
Service Item Number:2850243001S01
Version:A
Issue Date: 2023/11/09

212 Front Cover Assembly

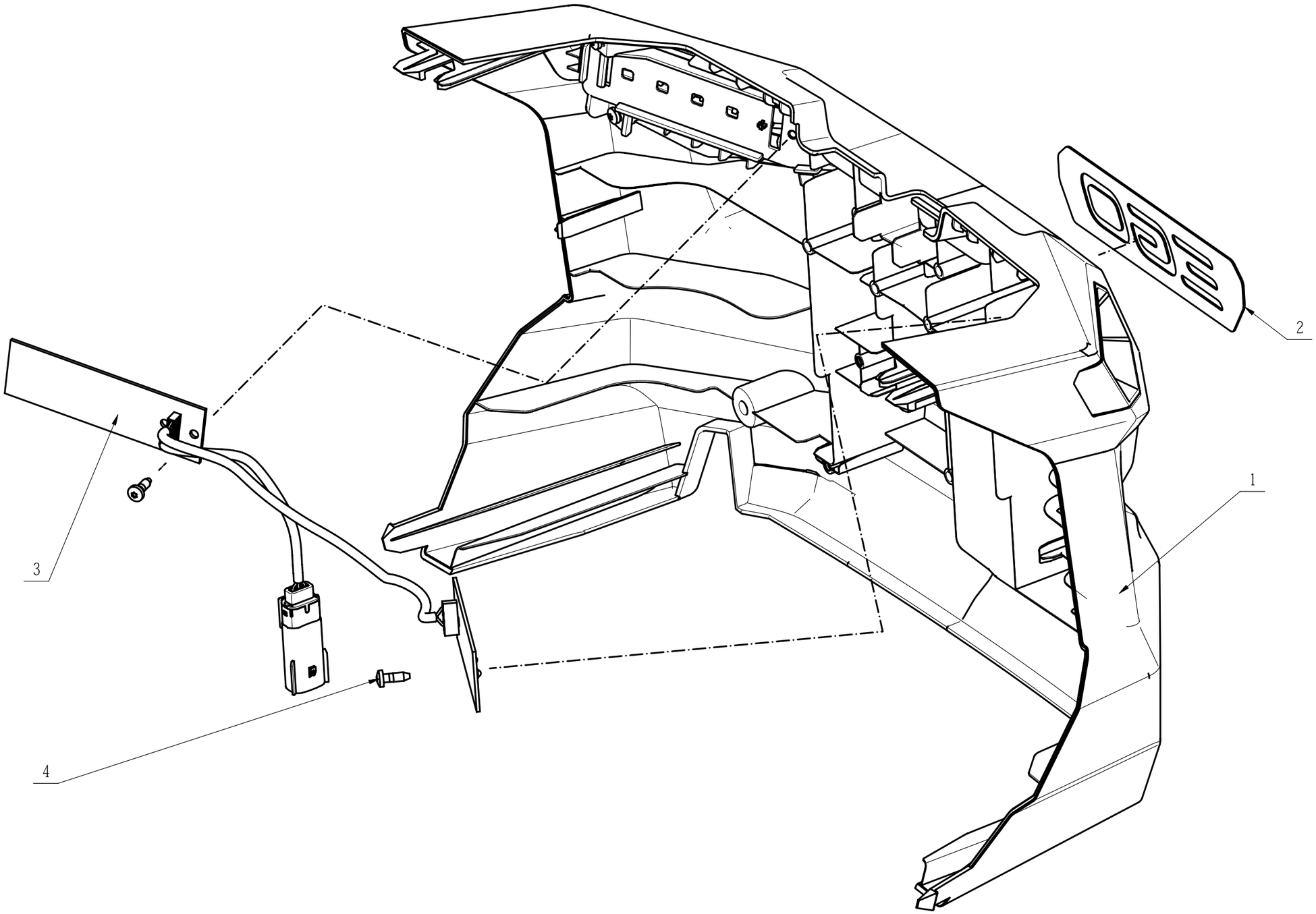

Index 13-212	Onderdeel nummer	Description	Partnumber	Qty
212-1	2850240002	Front Cover Assembly	2850240002	1
212-2	3707446001	EGO Logo	3707446001	1
212-3	2831479001	LED Electric Assembly	2831479001	1
212-4	5620377003	Hexagon Socket Screw	5620377003	2

Product Description:Tractor
Model Number:TR3800E-B
Service Item Number:2850682001S01
Version:A
Issue Date: 2023/11/09

213 Battery Box Assembly

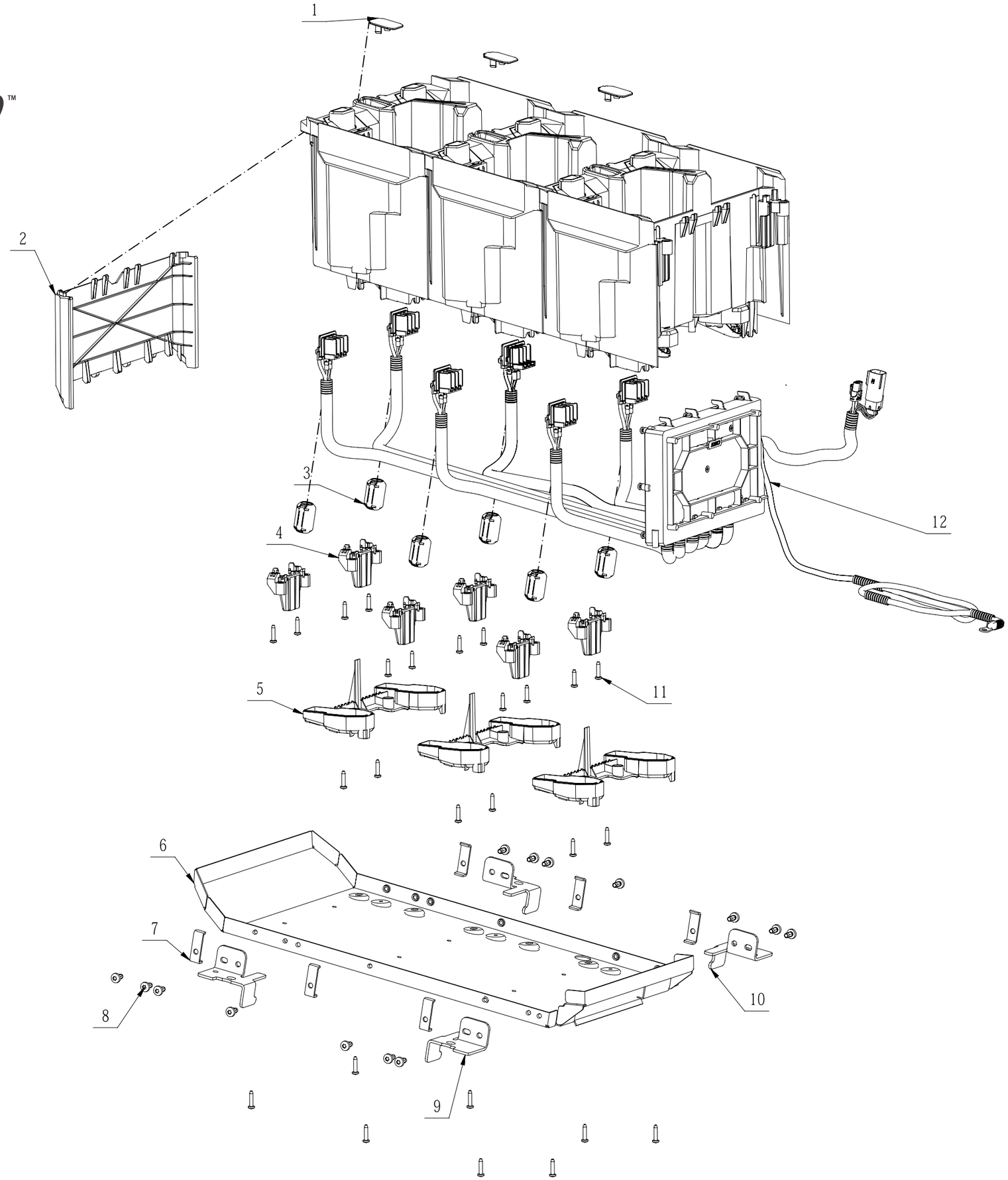

Index 14-213	Onderdeelnummers	Description	Partnumber	Qty
213-1	3130965001	Cover	3130965001	3
213-2	3130961001	Dust Cover	3130961001	1
213-3	3680226001	Magnetic Block	3680226001	6
213-4	3131426001	Supporting Structure	3131426001	6
213-5	3130969001	Cover Plate	3130969001	3
213-6	3709240001	Big Base Plate	3709240001	1
213-7	3707351001	Hook	3707351001	6
213-8	5610388001	Hexalobular Socket Thread Forming Screw	5610388001	14
213-9	3708880001	Battery Left Bracket	3708880001	2
213-10	3708879001	Right Bracket for Battery	3708879001	2
213-11	5620157006	Hexagon Socket Screw	5620157006	42
213-12	2831480001	BMS Electric Assembly	2831480001	1

Product Description:Tractor
Model Number:TR3800E-B
Service Item Number:2850577001S01
Version:A
Issue Date: 2023/11/09

215 Backboard Assembly

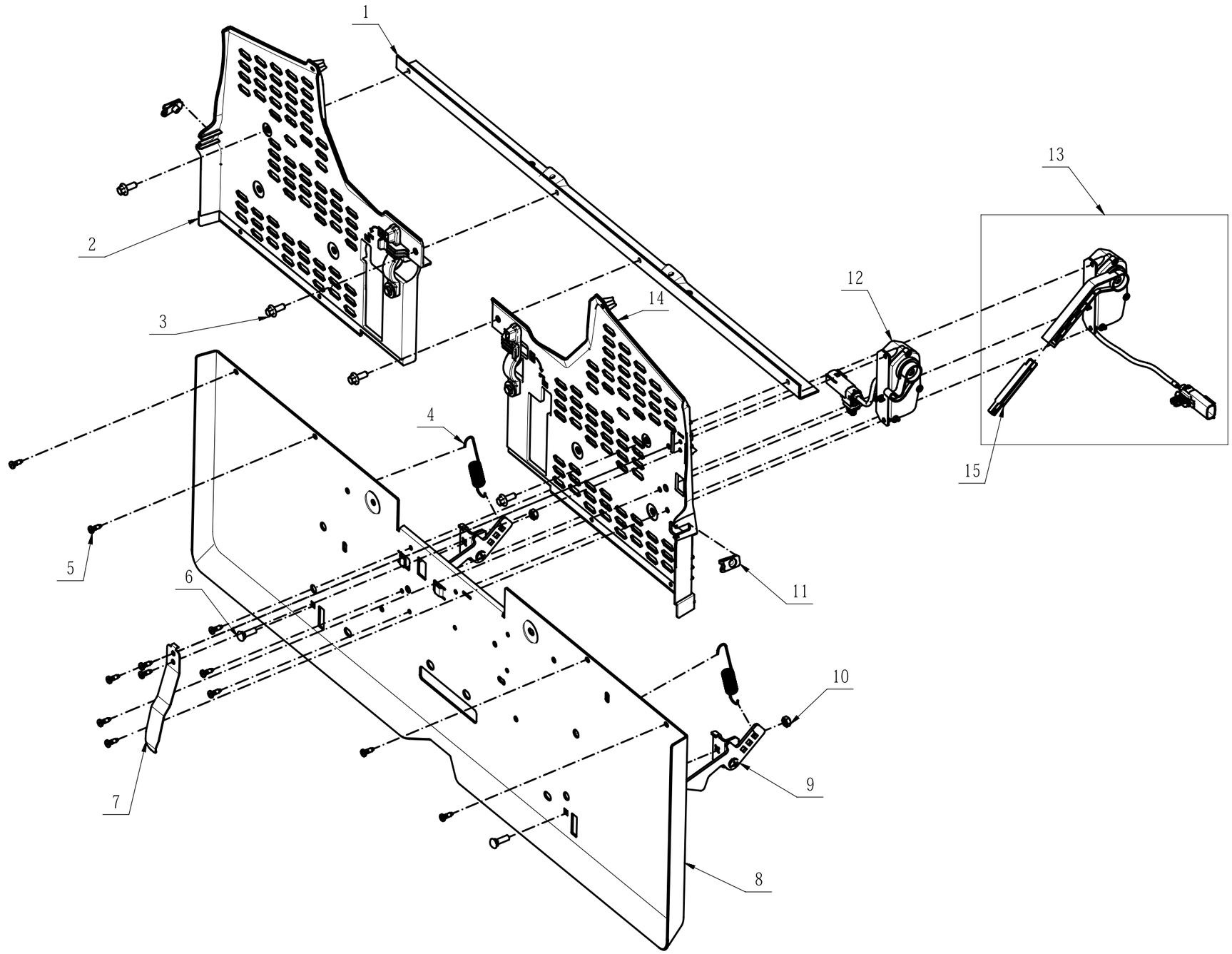

Index 14-215	Onderdeelnummer	Description	Partnumber	Qty
215-1	3709341001	Intermediate Support	3709341001	1
215-2	2850647001	Left Side Plate	2850647001	1
215-3	5611051001	Hexagon Flange Head Thread Forming Screw	5611051001	4
215-4	3667984001	Tension Spring	3667984001	2
215-5	5620377003	Hexagon Socket Screw	5620377003	12
215-6	5640357001	Semicircular Head Square Neck Bolt	5640357001	2
215-7	3709330001	Leaf Spring	3709330001	1
215-8	3709366001	Backboard	3709366001	1
215-9	2850645001	Lock Assembly	2850645001	2
215-10	5630015007	Prevailing Torque Hexagon Nut	5630015007	2
215-11	5630507001	Anti-stripping Clip	5630507001	2
215-12	2850620001	Switch Box Assembly	2850620001	1
215-13	2850621001	Switch Box Assembly	2850621001	1
215-14	2850648001	Right Side Plate	2850648001	1
215-15	3135052001	Telescopic Pole	3135052001	1

Product Description:Tractor
Model Number:TR3800E-B
Service Item Number:2850576002S01
Version:A
Issue Date: 2023/11/09

216 Grass Catcher Assembly

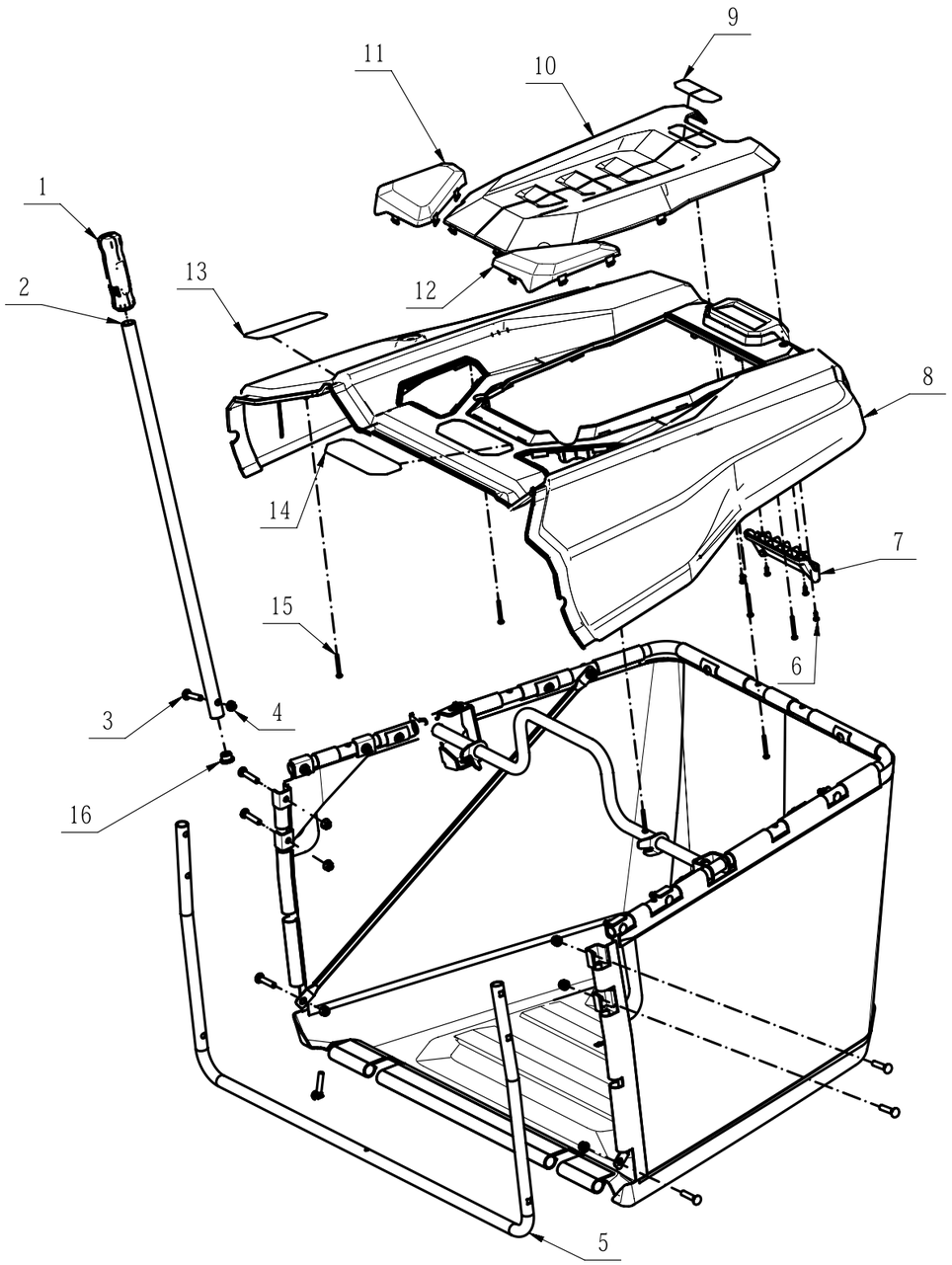

Index17-216	Onderdeelnummer	Description	Partnumber	Qty
216-1	3135303001	Handle	3135303001	1
216-2	3709367001	Telescope Tube	3709367001	1
216-3	5640327001	Square Neck Bolt	5640327001	14
216-4	5630371001	Prevailing Torque Type Hexagon Lock Nut with Flange	5630371001	15
216-5	3709362001	Elbow Tube	3709362001	1
216-6	5620377003	Hexagon Socket Screw	5620377003	4
216-7	3135003001	Rear Handle Cover	3135003001	1
216-8	3135000002	Rear Cover	3135000002	1
216-9	2246154001	Nameplate	2246154001	1
216-10	3135008002	Decorative Cover	3135008002	1
216-11	3135004001	Right Transparent Cover	3135004001	1
216-12	3135005001	Left Transparent Cover	3135005001	1
216-13	2246156001	Nameplate	2246156001	1
216-14	2246153001	Nameplate	2246153001	1
216-15	5610286001	Tapping Screw	5610286001	6
216-16	3135769001	End Cap	3135769001	1